DEPARTMENT OF WATER & POWER
CITY OF BIG BEAR LAKE

GUIDELINES FOR WATER SYSTEM PLANS AND STANDARD SPECIFICATIONS AND DRAWINGS

ADOPTED FEBRUARY 2, 2012

REGISTERED PROFESSIONAL ENGINEER
HANNIBAL BLANDON
NO. 48825
Exp. 09-30-12
CIVIL
STATE OF CALIFORNIA

TABLE OF CONTENTS

- Guidelines for Preparation of Water System Plans
- General Construction Notes
- Standard Specifications
- Standard Drawings

GUIDELINES FOR PREPARATION OF WATER SYSTEM PLANS

This plan checklist is a general guide to assist Consulting Engineers in the design and drafting of water plans. All work will be prepared using AutoCadd. Contact the DWP's Engineer concerning any exceptions, in order to prevent unnecessary plan revisions.

A. Title or Cover Sheet

1. Index map that shows water system location and sheet layout
2. List of Drawings
3. Project Vicinity Map
4. General Notes
5. Legend of Symbols
6. Minimum lettering height is 0.125 inch when using 24-inch x 36-inch prints

B. Water Plan and Profile

1. DWP's Title and Approval Block.
2. All sheets to have same scale: Horizontal 1/40 to have Vertical 1/4; Horizontal 1/20 to have Vertical 1/2; exceptions must have DWP's approval prior to submission of plans for review.
3. 8-inch pipes require plan and profile. All other site pipelines can be shown in plan only, except that all pipes crossing sewers or storm drains shall be shown in a profile detail.
4. Stationing shall correspond with street centerline.
5. All pipe will be polyvinyl chloride (PVC) pipe unless otherwise approved by DWP, 12" diameter and smaller shall meet AWWA C-900 standards. All pipes will be minimum 8" in diameter with exception of mains in cul-de-sacs, which may be smaller provided no hydrants are connected to those mains. Size of those pipes (4" or 6") shall be as determined by DWP. 4-inch pipe shall be minimum pressure class 200 (DR-14). All PVC pipe shall be installed with 12 gauge solid core copper insulated locating wire at a 45 degree angle from top of pipe.
6. Ductile iron pipe (DIP) may be used at drop sections and other locations as approved by DWP. DIP shall be cement mortar lined, minimum pressure class 150.

7. Pipe Location – Generally 5 feet off the existing or future face of curb in the street.

8. Pipe Depth - 42 inches minimum cover in paved streets and 48 inches minimum cover in unpaved streets and easements.

9. Water pipeline crossings over utilities must have 1-foot of vertical clearance between water pipe and utility. Pipelines crossing over sewer lines must meet minimum clearance and angle of approach as required by the California Department of Public Health.

C. Connections

1. Station all connections and branches off the mainline. Fittings at intersections shall be flanged with flange by mechanical joint valves installed at the required outlets. Four valves are to be installed at crosses and three valves are to be installed at tees.

2. Call out tees and elbows in the plan (size, type, and stationing).

D. Valves - Resilient Seat Gate Valves (RSGV) 6" through 12" are to be used throughout the system. Butterfly valves may be used only as approved by DWP.

E. Fire Hydrants - Show proper fire hydrant symbol and stationing. Fire hydrant location to be approved by local fire agency and or DWP inspector.

F. Blow-offs - Use a blow-off at the end of all lines where no fire hydrant exists.

G. Flush-outs - Use a flush-out at severe drops in water system (i.e. drop section under storm drain).

H. Air Valves - An air valve is required at high points in the water line wherever pipe grade changes from an "uphill" slope to a "downhill" slope. Designate an air valve symbol and station in profile.

I. Water Service - Show symbol on plans and station any meter that is not to be installed as typical. Alternative is to designate as "field-located". Preferred meter box location is at property corner, one foot off property line and within the public right of way.

J. Easements - Waterlines in easements are allowed only upon prior approval by DWP, prior to plan submittal. Provide easement description and plats were required. Minimum width is 30' with water in center of easement. Show and label easements on index map and plan view on improvement plans.

END OF SECTION

GENERAL CONSTRUCTION NOTES

(APPROPRIATE NOTES TO BE ADDED TO DRAWING COVER SHEET)

GENERAL NOTES

1. All work shall be in accordance with these plans and the City of Big Bear Lake Department of Water and Power (DWP) standards and specifications.

2. Location shown on the plans for existing utilities and substructures are approximate only. The Contractor shall expose all utilities prior to pipeline excavation and verify exact locations, elevations in the field. The Contractor shall maintain all existing utilities in-place. If substantial differences are found to exist between actual conditions and those originally anticipated, the Contractor shall immediately notify the DWP.

3. The Engineer has attempted to show various utility companies' underground facilities. It shall be the responsibility of the Contractor to familiarize himself with the job site and all underground utilities. The Contractor shall, at his own expense or cost, construct all improvements in such a manner as to protect all underground utilities. Neither DWP nor the Engineer will be responsible for damage to any underground utilities. Underground Service Alert (800) 227-2600 shall be contacted 2 working days prior to excavation.

4. The Contractor is responsible for the coordination of the removal or relocation of any and all existing utilities with the respective utility company. Cost of this coordination is to be included in the price bid for the various improvements to complete the project.

5. Backfill compaction and resurfacing in existing streets shall conform to City of Big Bear Lake or County of San Bernardino specifications or latest requirement. A Certification of Compaction signed by a Registered Civil Engineer (Contractor obtained and paid) shall be submitted for all trench backfills.

6. The Contractor shall be held responsible for any field changes made without prior written authorization from the undersigned Engineer and the DWP.

7. The Contractor is responsible for protecting all survey monuments and water pipeline markings. Any survey monuments disturbed during the course of construction shall be replaced at the Contractor's expense. Water markings destroyed will be replaced at Contractor's expense.

8. The Contractor agrees that he shall assume sole and complete responsibility for the job site conditions during the course of construction of this project, including safety of all persons and property; that this requirement shall apply continually and not be limited to normal working hours; and shall hold the DWP and the Engineer harmless from any and all liability, real or alleged, in connection with

the performance of work on this project excepting for liability arising from the sole negligence of the DWP or the Engineer.

9. A permit from the City of Big Bear Lake or County of San Bernardino shall be obtained prior to the beginning of any work or construction within the street right-of-way. The Contractor shall prepare any required traffic control plans.

10. Adequate stakes shall be set by the Contractor to construct the work to specified plan and grade.

11. Pipeline profile elevations are expressed in feet above mean sea level (MSL). Horizontal distances are in U.S. feet.

12. Adjust all valve boxes to finished grade unless otherwise shown or directed.

13. Not all pipe fittings or appurtenances are called out or shown but are required to be provided by the Contractor to provide a complete piping system.

14. Dimensioned distances shall govern over scaled distances.

15. Contractor shall maintain safe and continuous access to all businesses, residences and public facilities with reference to the W.A.T.C.H manual along the pipeline alignment.

16. The Contractor shall verify locations of all property lines and easements prior to the start of work. The contractor shall limit work to within the permanent easements, and the limits of work shown on the approved traffic control drawings provided by the Contractor and approved by the City of Big Bear Lake or the County of San Bernardino.

17. Unless noted otherwise, all work shown in these documents is new and to be performed under this contract.

18. Pipes shall slope uniformly between invert elevations noted and shall be connected to provide a complete, smooth flow path.

19. Connections between different classes of pipe shall be made with a connection rated for the higher pressure class.

20. Restoration of Roadway. The Contractor shall repair or replace all existing improvements within the right-of-way which are not designated for permanent removal (traffic signs, striping, pavement markers, legends, curb markings, loop detectors, traffic signal equipment, etc.) which are damaged or removed as a result of construction operations. Repairs and replacements shall be at least equal to existing improvements.

21. All horizontal or vertical changes in pipe alignment delineated on the plans as shown without bends, shall be installed in accordance with manufacturer's

recommendations. Total angular displacement shall be distributed through as many joints as practicable.

22. The Contractor shall not open more trenches that can be properly completed in a day's operation. All trenches shall be backfilled at the end of each day. However, any trench unavoidably left open during the hours of darkness or over a weekend shall be fenced with a 6-foot chain link fence and properly lighted, or bridged by a city approved traffic plate with reference to the W.A.T.C.H manual.

23. Normal working hours are 7:00 AM to 6:00 PM. Refer to Note 26 for inspection hours and requirements.

24. All removals in paved areas shall be saw cut on a neat, straight line parallel to the pipeline. The cut edge shall be protected from crushing and all broken edges shall be re-cut prior to paving operations.

25. Dust shall be controlled at all times by approved methods.

26. Normal inspection hours are 7:30 AM to 4:30 PM Monday through Friday, except legal holidays. Request for inspection at other times, or on other days, must be submitted to the DWP, for road work contact the DWP a minimum of 5-working days before the inspection is required. The Contractor must bear the cost of such overtime inspections and will be billed accordingly. Normal overtime rates are 1.5-times the base rate plus overhead. Overtime inspections will be made solely at the discretion of the DWP.

27. The DWP will review Contractor-supplied compaction tests and the contractor shall obtain approval from the DWP prior to allowing any placement of concrete or asphalt.

28. The Contractor shall not make any connection to the existing distribution system without first gaining written permission to do so from the DWP. In the event that permission is granted, a DWP inspector must be present on site to witness said connection(s). End caps shall be installed on the newly constructed side of all main connection points.

29. All testing and disinfection shall be made in the presence of an inspector from the DWP. The contractor shall notify the DWP not less than twenty-four (24) hours in advance of the actual time of testing and/or disinfection so that the DWP's inspector or designee may observe the procedure.

30. If the pressure, chlorination, or bacteriological (Bac-T) tests fail to meet the requirements of the specifications, the Contractor shall make all necessary repairs, replacements, or repetition of procedures at his own expense. The first Bac-T test shall be paid for by the DWP.

31. Right-of-way lines are approximate and are only intended for general reference. No record or survey conducted or implied. Contractor is responsible to verify any

and all property or easement data deemed necessary to perform the work as shown.

32. The Contractor shall have a city business license and insurance prior to the start of construction.

33. All utility services shall remain in service to each of the adjacent properties unless written approval of the DWP inspector is obtained prior to any work being started.

34. All new pavement types shall match existing asphalt types I.E. rubber to rubber, AR 4000 to AR 4000.

35. The Contractor shall make every effort to identify all above and below grade structures and other items that may conflict with the proposed work. All items shall be protected in place unless specified otherwise on these plans, or replaced in kind, by the Contractor if disturbed during the course of construction.

36. The Contractor shall comply with all OSHA safety standards including, but not limited to, the use of personal protective equipment (hard hats, vests, eye wear, etc) and trench shoring and bracing.

37. The Contractor is responsible for securing it's own staging area. All associated fees shall be included in the bid item for mobilization.

WATER SYSTEM NOTES

1. Contractor shall notify DWP 48 hours prior to commencing any work.

2. It is the Contractor's responsibility to maintain a current and approved set of DWP standard specifications on the job site at all times. Standard specifications can be purchased at the DWP office.

3. Provide a minimum of 10 feet of separation between sewer and water laterals where possible.

4. Crossings over existing sewer lines shall be made at a 45 degree angle or as directed by DWP inspector.

5. All pipe shall be bedded and backfilled in accordance with DWP standards. See Standard Drawing No. 2.

6. All valves installed by the Contractor shall be flanged directly to the tee or cross and shall be accessible for operation with complete valve box to grade directly following connection to existing water system as approved by DWP.

7. The Contractor shall be responsible for adequate sizing of thrust blocks based on field connections. The size shown on plans is the minimum size required per DWP Standard Drawing No. 3 or as indicated herein.

8. 12 GA. insulated solid core-heavy jacketed copper wire shall be fastened to the PVC pipe at 45 degrees from the top, with duct tape at 4 foot intervals. The wire or equivalent material shall also be looped to fire hydrant runs and wrapped around valves.

9. Installation and material of temporary blow-offs to be the responsibility of the Contractor.

10. Existing paving, lawn, shrubs, fences, rock gardens, irrigation systems, signs and other improvements damaged by the Contractor shall be repaired and/or replaced by the Contractor to the satisfaction of DWP.

11. Fire hydrants shall conform to the DWP standard specifications and shall be 6-inch, 3-way with two (2) 2-1/2 inch and one (1) 4-inch outlet, 24-inch head and 54-inch minimum bury. Hydrants shall be Dry Barrel Waterous WB67-250DDP. See Standard Drawing No. 6.

12. On streets without curbs, all fire hydrants shall be located in the field by the DWP and shall be protected with barricades as shown on Standard Drawing No. 10 or as directed by DWP inspector.

13. All fittings shall be flanged or mechanical joint.

14. Minimum cover over new pipe shall be 42-inches, in paved roads and 48-inches in unpaved roads or easements unless otherwise directed by DWP inspector.

15. All service changeovers to be the responsibility of the Contractor.

16. All ductile iron pipe and fittings shall be American made.

17. The Contractor is alerted that there is AC pipe in the system and that connections will be made to this material. The Contractor shall be responsible for making the connections, and for all ancillary work required, including handling and disposal of hazardous materials. All removal and disposal shall be in accordance with the applicable local, state, and federal laws and standards.

18. The Contractor shall be responsible for providing the proper coupling adapters for connecting the various pipe materials together. All couplings must be approved by the DWP prior to installation.

END OF SECTION

Standard Specifications

TABLE OF CONTENTS - STANDARD SPECIFICATIONS

SECTION 01000 - GENERAL REQUIREMENTS

01000.01 Working Space
01000.02 Preconstruction Meeting
01000.03 Permits and License
01000.04 As-built Drawings
01000.05 Protection of Existing Utilities
01000.06 Time Limits and Protection of Trenches
01000.07 Nuisance Water
01000.08 Construction Scheduling and Service Interruptions
01000.09 Inspection Fees
01000.10 Final Inspection

SECTION 02200 - EARTHWORK

02200.01 General
02200.02 Excavation
02200.03 Backfill
02200.04 Compaction Tests
02200.05 Protection of Workers in Trenches and Excavations

SECTION 03100 - CONCRETE

03100.01 General
03100.02 Compressive Strength
03100.03 Cement and Additives
03100.04 Aggregates
03100.05 Slump
03100.06 Forms
03100.07 Placement of Concrete
03100.08 Finish of Concrete Surfaces
03100.09 Curing

SECTION 03200 - REINFORCING STEEL

03200.01 General
03200.02 Materials
03200.03 Installation
03200.04 Wire Mesh Reinforcement

TABLE OF CONTENTS - STANDARD SPECIFICATIONS

SECTION 15600 - PIPING REQUIREMENTS - WATER

15600.01 General
15600.02 Polyvinyl Chloride (PVC) Pressure Pipe
15600.03 Ductile Iron Water Pipe
15600.04 Cast Iron Pipe
15600.05 Steel Pipe
15600.06 Red Brass Pipe
15600.07 Copper Pipe
15600.08 Mechanical-Type Coupling
15600.09 Sleeve-Type Couplings
15600.10 Gaskets
15600.11 Bolts
15600.12 Coating Buried Miscellaneous Ferrous Surfaces, Valves, and Flanged Joints
15600.13 Pipe Insulation

SECTION 15610 - TESTING & DISINFECTION

15610.01 General
15610.02 Testing of Piping
15610.03 Disinfecting Pipelines

SECTION 15620 - VALVES & HYDRANTS

15620.01 General
15620.02 Epoxy Coating
15620.03 Gate Valves
15620.04 Butterfly Valves
15620.05 Silent Check Valves
15620.06 Swing Check Valves
15620.07 Air Vacuum and Air Release Valves
15620.08 Air Release Valves
15620.09 Corporation Stops
15620.10 Pressure Gauges
15620.11 Water Pressure Reducing Valves
15620.12 Water Pressure Relief Valve
15620.13 Fire Hydrant, Flushout, and Blow-Off Assembly

SECTION 01000

GENERAL REQUIREMENTS

01000.01 WORKING SPACE

The Contractor shall limit his work activities, including the temporary storage of materials and excavated dirt, inside dedicated rights-of-way or temporary construction easements unless otherwise required for completion of the work, and as approved by the DWP inspector. The Contractor shall limit the area to be disturbed and shall keep street open for local traffic at all times.

01000.02 PRECONSTRUCTION MEETING

Prior to commencement of work, the Contractor shall meet with the DWP and shall furnish the following items:

- A schedule of completing the principal items of work.
- A list of names, titles, addresses, and telephone numbers of the Contractor's responsible personnel indicating those who may be reached outside of the normal working hours.

01000.03 PERMITS AND LICENSE

The Contractor shall obtain from the City of Big Bear Lake and/or the County of San Bernardino Road Department a permit for the project. All work, including the removal and repair of asphalt paving, shall be performed in accordance with said permits.

01000.04 AS-BUILT DRAWINGS

The Contractor shall maintain on the job site a set of full size blueline drawings. On these, he shall mark all as-built conditions, locations, configurations, and other details which may vary from the details shown on the original Contract Drawings. Upon completion of work and prior to final acceptance, the as-built drawings shall be turned over to the DWP.

01000.05 PROTECTION OF EXISTING UTILITIES

The Contractor shall exercise his best effort and care to protect existing utilities (water lines, gas mains, power poles, etc.) against damage from his operations. All damages shall be repaired by the Contractor at his own expense. The Contractor shall expose all utilities and verify exact locations, elevations, and dimensions in the field. The Contractor shall maintain all existing utilities in place.

01000.06 TIME LIMITS AND PROTECTION OF OPEN TRENCHES

All pipeline trench excavation shall have pipe laid and be backfilled within the same day unless the Contractor can prove to the DWP's satisfaction that in certain areas due to

poor soil conditions, excessive depth of excavation or restricted work area that the backfilling cannot be completed in the same day. Under no circumstances may more than 500 feet of open trench remain overnight. Within public right-of-way, no pipeline trench may remain open overnight unless permission is granted by the DWP in writing prior to work within these areas.

01000.07 NUISANCE WATER

The Contractor shall anticipate nuisance water, such as rainfall, irrigation water, ground water or surface water runoff which may be encountered within the construction site during the period of construction. The Contractor shall at all times protect the work from damage by such waters and shall take all due measures to prevent delays in progress of the work caused by such waters. The Contractor shall dispose of nuisance water, and without adverse effects to the site or any other property.

01000.08 CONSTRUCTION SCHEDULING AND WATER SERVICE INTERRUPTION

All existing water pipeline, fire hydrants, and water services shall remain active, and in service, during the installation of the proposed water improvements. The new pipeline and appurtenances (including mainline, hydrant and blowoff, laterals, air release valve laterals and water service laterals), including cross street connections, shall be hydrostatically tested and disinfected prior to connection to the existing system. Water system and water service transfers shall be performed in an expedient manner in order to reduce water outages to DWP customers. In no case shall customers be without water for a period which exceeds six (6) hours unless approved by DWP inspector.

The Contractor shall be required to place "Service Interruption" door tags at each water customer at least 48 hours prior to the planned interruption. Tags will be provided by the DWP, and the Contractor shall be responsible for filling in the appropriate dates and times of the planned interruption, and placing the tags at each customers door.

01000.09 INSPECTION FEES

For projects funded by DWP, Contractor shall pay for DWP inspection for overtime work. Overtime work is considered any work performed in excess of eight (8) hours per day, Monday through Friday, and any work conducted on Saturdays, Sundays and holidays. Overtime work shall be charged at a rate of 1.5 times the base rate plus overhead. Overtime inspections will be made solely at the discretion of the DWP. Contractor will not be required to pay for DWP inspection performed on regular work days and during regular work hours.

For projects not funded by DWP, Contractor shall pay for all DWP inspections conducted during regular working hours Monday through Friday. No overtime inspections will be allowed or approved by DWP.

01000.10 FINAL INSPECTION

The Contractor shall attend a final inspection of the project alignment with the DWP. The date of the final inspection will be determined by the Contractor, based on his completion of the project, and the Contractor shall notify the DWP at least 72 hours prior to the date of the inspection. The Contractor shall be responsible to record all items identified by the DWP which are not completed in accordance with the plans and specifications. During this inspection, the Contractor will be required to operate all valves (fully closing and opening all valves) in the presence of a DWP representative.

END OF SECTION

SECTION 02200

EARTHWORK

02200.01 GENERAL

(a) The latest version of the following Standards are applicable to this Section:

American Society for Testing and Materials (ASTM)

- ASTM D1557 - Standard Test Methods for Laboratory Compaction Characteristics of Soil Using Modified Effort (56,000 ft-lbf/ft3)
- ASTM D5220 - Standard Test Method for Water Mass per Unit Volume of Soil and Rock In-Place by the Neutron Depth Probe Method

(b) The Contractor shall perform all earthwork required for construction of the proposed improvements as specified and shown.

(c) Earthwork includes all plant, labor, equipment, and materials as required or necessary to clear, grub, excavate, trench, fill, backfill and grade for the construction of all structures, pipelines, ditches, embankments and graded areas.

(d) Engineer has attempted to show all known underground piping on the plans. The Contractor's attention is directed to the possible existence of pipe and other underground improvements which may or may not be shown on the plans. All reasonable precautions shall be taken to preserve and protect any such improvements whether shown on the plans or not. Where it is necessary to remove and replace or to relocate such improvements in order to prosecute the work, they shall be removed, maintained and permanently replaced following review by Engineer and owners of the utility.

(e) Earthwork within the rights-of-way of the California Department of Transportation, the County Road Department, and City or other governmental agency, having jurisdiction, shall be done in accordance with the requirements and the provisions of the permits issued by those agencies for the construction within their respective rights-of-way. Such requirements and provisions, where applicable, shall take precedence and supersede the provisions of these specifications. These technical specifications shall be the minimum requirement.

(f) In addition to the requirements herein set forth for piping and structural earthwork, all work shall be in accordance with the requirements of the County grading ordinance or ordinance of any other agencies having jurisdiction.

02200.02 EXCAVATION

(a) GENERAL. Except when specifically provided to the contrary, excavation shall include the removal of all materials of whatever nature encountered, including all obstructions of any nature that would interfere with the proper execution and completion of the work. The removal of said materials shall conform to the lines and grades shown or ordered.

Unless otherwise provided, the areas of construction shall be stripped of all vegetation and debris, and such material shall be removed from the site prior to performing any excavation or placing any fill. Excavated material suitable for backfill shall be stored temporarily in such a manner as it will facilitate work under the Contract.

Any damage done to private property by reason of work on easements shall be the responsibility of the Contractor. Fences and landscaping which are removed or damaged by the Contractor shall be restored to their original condition at the Contractor's expense.

The Contractor shall furnish, place, and maintain all supports and shoring that may be required for the sides of the excavations, and all pumping, ditching, or other approved measures for the removal or exclusion of water, including taking care of storm water reaching the site of the work from any source so as to prevent damage to the work or adjoining property.

Excavations shall be sloped or otherwise supported in a safe manner in accordance with applicable State and Federal industrial safety requirements, and as reviewed by the Engineer. All excavations shall be performed, protected, and supported as required for safety and in the manner set forth in the operating rules, orders and regulations prescribed by the Division of Industrial Safety of the Department of Industrial Relations of the State of California. Barriers shall be placed at each end of all excavations and at such places as may be necessary along excavations to prevent accidents. Lights shall also be placed along excavations from sunset each day to sunrise of the next day until such excavation is entirely refilled.

(b) PIPELINE TRENCH EXCAVATION

(1) GENERAL. Unless otherwise shown or ordered, excavation for pipelines, fittings, valves, and appurtenances, shall be open-cut trenches. The bottom of the trench shall have a minimum width equal to the outside diameter of the pipe plus 12 inches and a maximum width equal to the outside diameter of the pipe plus 20 inches. Except when otherwise shown or ordered by the Engineer, the bottom of the trench shall be excavated uniformly to 6-inches deeper than the grade of the bottom of the pipe.

The maximum amount of open trench permitted in any one location shall be 500 feet, or the length necessary to accommodate the amount of pipe installed in a single day, which ever is greater. All trench shall be fully backfilled at the end of each day or, in lieu thereof, when reviewed by the Engineer, heavy steel plate adequately braced and capable of supporting vehicular traffic may be used in certain locations where it is impractical to backfill at the end of each day. The above requirements for backfilling or use of steel plate will be waived in cases where the trench is located further than 100 feet from any traveled roadway or occupied structure. In such cases, however, barricades and warning lights satisfactory to the Engineer shall be provided and maintained.

(2) TRENCH OVER-EXCAVATION WHERE SHOWN. Trenches shall be over excavated where shown, to the depth shown, then backfilled to the grade of the bottom of the pipe with suitable selected granular material or with sand. Said backfill shall be brought to optimum moisture content and compacted to 95 percent of maximum dry density where the pipeline trench passes under structures, and 90 percent elsewhere. Work specified in this Subsection shall be performed by the Contractor at his own expense.

(3) TRENCH OVER-EXCAVATION WHEN ORDERED. Trenches shall be over-excavated beyond the depth shown, when ordered by the Engineer in areas where poor soil (soft, spongy, or unstable material) or rock is encountered. Such over-excavation shall be to the depth ordered. The trench then shall be refilled to the grade of the bottom of the pipe with either selected imported sandy material having a sand equivalent value of not less than 30. Bedding material shall be placed in layers, brought to optimum moisture content, and compacted to 95 percent of maximum dry density where the pipeline trench passes under structures, and 90 percent elsewhere. All work specified in this Subsection shall be performed by the Contractor at his own expense when the over-excavation ordered by the Engineer is less than 6 inches below the limits shown. When the over-excavation ordered by the Engineer is 6 inches or greater below the limits shown, additional payment will be made to the Contractor for that portion of the work which is located below said 6-inch distance. Said additional payment will be made under a separate unit price bid item for over-excavation and bedding if such bid item has been established; otherwise payment will be made in accordance with a negotiated price for execution of a change order.

(c) EXCAVATION BENEATH STRUCTURES. Except where otherwise specified for a particular structure or ordered by the Engineer, excavation shall be carried to the grade of the bottom of the footing or slab. Where shown or ordered, areas beneath structures shall be over-excavated. When such over-excavation is shown on the drawings, both over-excavation and subsequent backfill to the required grade shall be performed by the

Contractor at his own expense. When such over-excavation is not shown but is ordered by the Engineer, such over-excavation and any resulting backfill will be paid for under a separate unit price bid item if such bid item has been established; otherwise payment will be made in accordance with a negotiated price. After the required excavation or over-excavation has been completed, the exposed surface shall be scarified to a depth of 6 inches, brought to optimum moisture content, and rolled with heavy compaction equipment to 95 percent of maximum dry density.

(d) SITE GRADING. After stripping has been done, all areas covered by the work, including excavated and filled section shall be graded uniformly to the lines and grades indicated on the drawings. The finished surface shall be reasonably smooth and well compacted. All excavated material suitable for fill shall be transported to and placed in the fill area within the limits of the work. All excavated materials which are unsuitable for fill shall be disposed of by the Contractor at his own expense. During construction, excavation and filling shall be performed in a manner and sequence that will provide drainage at all times.

Ditches shall be cut accurately to the cross-sections and grades indicated. Any excessive ditch excavation shall be backfilled to grade either with suitable, thoroughly compacted material, or with suitable stone or cobble to form an adequate paving.

(e) OVER-EXCAVATION NOT ORDERED, SPECIFIED, OR SHOWN. Any over-excavation carried below the grade ordered, specified, or shown, shall be refilled to the required grade with suitable selected granular material. Such material shall be moistened as required and compacted to 95 percent of maximum dry density under structures, and 95 percent elsewhere. Such work shall be performed by the Contractor at his own expense.

(f) EXCAVATION IN LAWN AREA. Where pipeline excavation occurs in lawn areas, the sod shall be carefully removed and stockpiled to preserve it for replacement. Excavated material from the trench may be placed on the lawn provided a drop cloth or other suitable method is employed to protect the lawn from damage. The lawn shall not remain covered for more than 72 hours. Immediately after completion of backfilling and testing of the pipeline, the sod shall be replaced in a manner so as to restore the lawn as near as possible to its original condition.

(g) EXCAVATION IN VICINITY OF TREES. Trees and other natural growths outside the actual lines of construction operations shall not be destroyed and such measures as are necessary shall be taken by the Contractor for the protection thereof. Trees shall be supported during excavation as may be directed by the Engineer. In the installation of pipe lines outside of public rights of way or in easements, trees shall not be removed and no tree roots over 2-inches in diameter shall be cut without express permission of the Engineer.

(h) ROCK EXCAVATION AND BLASTING. Rock excavation shall include removal and disposal of the following: (1) all boulders measuring 1/3 of a cubic yard or more in

volume; (2) all rock material in ledges, bedding deposits, and unstratified masses which cannot be removed without systematic drilling and blasting; (3) concrete or masonry structures which have been abandoned; and (4) conglomerate deposits which are so firmly cemented that they possess the characteristics of solid rock and which cannot be removed without systematic drilling and blasting. Said rock excavation shall be performed by the Contractor at his own expense, provided that should the quantity of rock excavation be affected by any change in the scope of the work, an appropriate adjustment of the contract price will be made under a separate additive--deductive bid item if such bid item has been established: otherwise payment will be made in accordance with a negotiated price.

All operations, storage and handling of explosives shall be according to provisions of Division 11(Explosives), Part 1(High Explosives), of the Health and Safety Code, State of California, and shall comply with all State, County and local laws. Drilling and blasting are to be done only by personnel skilled in such operations. All necessary precautions shall be taken for protection of life and property. Warnings shall be given to nearby property owners that blasting is in progress. Safety mats shall be used to restrict flying particles. The Contractor shall size each "blast" to minimize nuisance and reduce the possibility of damage to local structures.

(i) DISPOSAL OF EXCESS EXCAVATED MATERIAL. The Contractor shall remove and dispose of all excess excavated or waste material at his own expense. The contractor is prohibited from depositing excess dirt in and/or near any steam bed or natural drainage channel.

Excavated material shall not be deposited on private property unless written permission from DWP thereof is secured by the Contractor. Copies of said written permission, duly signed by DWP of the private property involved, shall be furnished to the Engineer by the Contractor before such material is placed on private property.

02200.03 BACKFILL

(a) GENERAL. Backfill shall not be dropped directly upon any structure or pipe. Materials used for backfill shall be selected material, free from grass, roots, brush, or other vegetation, or boulders having maximum dimension larger than 6 inches. Imported sand material shall be used for all backfill coming within 12 inches of any structure, pipe, or appurtenance. Backfill shall not be placed around or upon any structure until the concrete has attained sufficient strength to withstand the loads imposed. Backfill around water retaining structures shall not be placed until the structures have been tested, and the structures shall be full of water while backfill is being placed.

Whenever the excavated material is unsuitable for backfill, the Contractor shall arrange for and furnish imported backfill material at his own expense.

(b) PIPELINE TRENCH BACKFILL

(1) Pipeline trenches which include mainline, hydrant and blowoff laterals, air release valve laterals, and water service laterals, shall be backfilled from the bottom of the trench (6-inches below the pipe) to a level 12 inches above the top of the pipe with selected sandy material imported, having a sand equivalent value of not less than 30, such material shall be compacted to 95 percent of maximum dry density where the trench is located under structures, and 90 percent of maximum dry density elsewhere. Compaction shall be obtained by mechanical means or, if reviewed and approved by the Engineer, by using excessive water and passing concrete vibrator between the pipe and the side of trench.

(2) After the initial portion of backfill has been placed as specified above, and after all excess water has completely drained from the trench, backfilling of the remainder of the trench may proceed. The remainder of the backfill shall be selected material obtained from the excavation and shall be placed in horizontal layers. Each layer shall be moistened, tamped, puddled, rolled or otherwise compacted to 95 percent of maximum dry density where the trench is located under structures, and 90 percent of maximum density elsewhere.

(c) BACKFILL AROUND AND BENEATH STRUCTURES, AND BENEATH PAVED AREAS. Except where otherwise specified for a particular structure or ordered by the Engineer, backfill placed around and beneath structures, and beneath paved areas, shall be placed in horizontal layers not to exceed 8 inches in thickness, as measured before compaction, where compaction is attained by means of sheepsfoot rollers. Where the use of sheepsfoot rollers is impractical, the layers shall not exceed 6 inches in thickness before compaction, and compaction shall be attained by means of hand-operated power-driven tampers. The backfill shall be brought up evenly with each layer moistened and compacted by mechanical means to 95 percent of maximum density beneath structures, and 90 percent of maximum density around the sides of structures and beneath paved areas.

(d) EMBANKMENT FILL. The area where an embankment is to be constructed shall be cleared of all vegetation, roots and foreign material. Following this, the surface shall be moistened, scarified to a depth of 6 inches, and rolled or otherwise mechanically compacted to 95 percent of maximum density under structures, and 90 percent of maximum density elsewhere. Embankment fill shall be placed in horizontal layers not to exceed 8 inches in thickness, as measured before compaction, where compaction is attained by means of sheepsfoot rollers. Where the use of sheepsfoot rollers is impracticable, the layers shall not exceed 6 inches in thickness before compaction, and compaction shall be attained by means of hand-operated power-driven tampers. The backfill shall be brought up evenly with each layer moistened and compacted by mechanical means to 98 percent of maximum density under structures, and 90 percent

of maximum density elsewhere. The top 6 inches of backfill on embankments shall consist of loamy earth, free of rocks larger than 1 inch in maximum dimension.

02200.04 COMPACTION TESTS

The provisions of this Section shall govern unless superseded by more stringent provisions of a permitting agency.

The degree of compaction shall be determined by a representative of the DWP, at the expense of the Contractor, using the test procedure specified in ASTM Standard D1557. Field density tests shall be performed in accordance with the test procedure specified in ASTM Standard D5220.

Testing of a portion of the completed subgrade for compliance with the specified compaction requirements shall be performed when requested by the Contractor. An advance notice of 24 hours by the Contractor shall be required to arrange for soils tests. Tests shall be worked into the Soils Engineer's schedule in a reasonable manner. No more than one (1) trip to the job site per day will be made by the technician who takes the compaction tests. Tests shall be made in the compacted subgrade at locations, depths and in numbers as specified by DWP. Tests shall be performed at 300 foot intervals along the trench alignment. These test excavations shall be provided by the Contractor at no expense to DWP. The Contractor shall reimburse DWP for the extra cost incurred by DWP due to the soils technician's standby time while waiting to take soils tests when the required test excavations are not ready at the agreed upon time. DWP shall pay for all soils testing required by DWP which meet the required compaction. The Contractor shall reimburse DWP for the cost of all failing compaction tests. The Contractor shall also reimburse DWP for any additional soils engineering performed at the Contractor's request to facilitate his construction.

02200.05 PROTECTION OF WORKERS IN TRENCHES AND EXCAVATIONS

The Contractor shall provide and maintain shoring or cut-sloping as required herein to protect employees.

As required by Section 6705 of the California Labor Code and in addition thereto, whenever work under the contract involves excavation five feet or more in depth, the Contractor shall submit for acceptance by a registered civil or structural engineer representing DWP, in advance of excavation, a detailed plan showing the design of shoring, bracing, sloping or other provisions to be made for worker protection from the hazard of caving ground during the excavation. If such plan varies from the shoring system standards established by the Construction Safety Orders of the CAL OSHA, the plan shall be prepared by a registered civil or structural engineer. Nothing in this section shall be deemed to allow the use of a shoring, sloping or other protective system less effective than that required by the Construction Safety Orders. Nothing in this section shall be construed to impose tort liability on DWP, Engineer, or any of their officers, agents or employees. Shoring diagrams shall have the approval of the

Department of Industrial Safety prior to submittal to the Engineer. Excavations shall be sheeted, braced and shored as required to support the walls of the excavations to eliminate sliding and settling and as may be otherwise required to protect the workers and existing utilities, structures and improvements. The Contractor shall be fully responsible for the adequacy of methods and materials used in trench sheeting, bracing, shoring, and/or other systems provided to protect workmen. Injury to or death of workmen resulting from inadequate trench safety measures shall be the full and complete responsibility of the Contractor.

END OF SECTION

SECTION 03100

CONCRETE

03100.01 GENERAL

The latest version of the following Standards are applicable to this Section:

American Society for Testing and Materials (ASTM)

- ASTM C33 - Standard Specifications for Concrete Aggregates
- ASTM C94 – Standard Specification for Ready-Mix Concrete
- ASTM C150 – Standard Specification for Portland Cement
- ASTM C618 – Standard Specification for Coal Fly Ash and Raw or Calcined Natural Pozzolan for Use in Concrete

The Contractor shall furnish all necessary materials, forms, and equipment for concrete work required under the Contract and as shown on the Drawings. Concrete shall conform to the requirements of ASTM Standard C94 subject to the modifications and supplemental requirements contained in these specifications.

03100.02 COMPRESSIVE STRENGTH

Thrust block and encasement concrete shall have a minimum 28-day compressive strength of 2,000 psi; all other concrete shall have a minimum 28-day compressive strength of 3,000 psi.

03100.03 CEMENT AND ADDITIVES

Except as may be otherwise provided in these specifications, cement shall conform to ASTM Standard C150 and shall be either Type II or Type V.

Fly ash or other pozzolans used as admixtures shall conform to ASTM Standard C618, Class C or Class F with 4 percent maximum loss on ignition and 20 percent maximum cement replacement.

03100.04 AGGREGATES

Aggregates shall conform to ASTM Standard C33. Coarse aggregate shall be of 1½-inch maximum size.

03100.05 SLUMP

The maximum slump for concrete to be used in footings and slabs shall be 3-inches; the maximum slump for all other concrete shall be 4 inches.

03100.06 FORMS

Forms for exposed concrete structures shall be of new Plyform at least 5/8 of an inch thick. All other forms shall be of smooth tongue and groove boards, shiplap, or plywood. Exposed vertical corners of all concrete structures shall be given a 3/4-inch chamfer. Forms shall not be removed until adequate curing period has elapsed and until concrete has acquired the desired strength.

03100.07 PLACEMENT OF CONCRETE

As concrete is placed in forms or in excavations, it shall be thoroughly settled and compacted throughout the entire depth of the layer which is being consolidated, into a dense homogeneous mass. Except in special cases where their use is deemed impracticable by the Engineer, the Contractor shall use high-speed internal vibrators of an approved immersion type.

03100.08 FINISH OF CONCRETE SURFACES

(a) All finished or formed surfaces shall conform accurately to the shape, alignment, grades and sections as shown or ordered. Surfaces shall be free of fins, bulges, ridges, offsets, honeycombing, or roughness of any kind, and shall present a finished, smooth, continuous, hard surface.

(b) Exposed unformed surfaces of concrete shall be given a steel trowel finish. Excessive floating of surfaces while the concrete is plastic will not be permitted. Dusting on of dry cement or sand to absorb excess moisture will not be permitted. Unless otherwise shown, the edges of all exposed horizontal surfaces shall be finished with an edging tool to a radius of 1/2 of an inch.

03100.09 CURING

All structural concrete shall be cured by being kept moist for 14 days after placing, or at the option of the Contractor, may be cured by use of a curing compound approved by the Engineer. Encasement concrete and thrust blocks may be covered with earth 24 hours after placing.

END OF SECTION

SECTION 03200

REINFORCEMENT STEEL

03200.01 GENERAL

(a) The latest version of the following Standards are applicable to this Section:

American Society for Testing and Materials (ASTM)

- ASTM A185 – Standard Specification for Steel Welded Wire Reinforcement, Plain, for Concrete
- ASTM A615 - Standard Specification for Deformed and Plain Carbon-Steel Bars for Concrete Reinforcement

American Concrete Institute (ACI)

- ACI 318 – Building Code Requirements for Structural Concrete and Commentary

(b) The Contractor shall furnish, fabricate, and install all reinforcement steel shown and specified. The work shall further include the furnishing and installation of all tie wires, clips, supports, chairs, spacers, and other appurtenances necessary to fulfill the requirements of the specifications and produce finished concrete structures in accordance with the best engineering practice.

(c) Unless the Engineer issues a waiver in writing, the Contractor shall furnish shop bending diagrams, placing lists, and drawings of all reinforcement steel prior to fabrication in accordance with Section 2.05 of the General Conditions. Approval of shop drawings by the Engineer will be limited to general compliance with the contract drawings. The Contractor shall be fully responsible for accuracy of dimensions and details, and said dimensions and details will be checked in the field by the Engineer at the time of placement.

03200.02 MATERIALS

Reinforcement steel shall be deformed steel bars, or cold-drawn steel wire, or fabricated forms of those materials, as required by the applicable drawings and specifications. Materials shall conform in quality to the requirements of ASTM Standard A615. Steel bars shall be Grade 60.

03200.03 INSTALLATION

(a) CLEANING. Reinforcement steel, before being positioned, shall be free from loose mill and rust scale, and from coatings that may destroy or reduce the bond. Where there is delay in depositing concrete, reinforcement steel shall be reinspected and cleaned when necessary.

(b) FABRICATION. Reinforcement steel shall be accurately formed to the dimensions and shapes indicated on the applicable drawings, and the fabricating details shall be prepared in accordance with ACI Standard 318, except as modified by the drawings. Stirrups and tie bars shall be bent around a pin having a diameter not less than 1½-inch for No. 3 bars, 2-inch for No. 4 bars, and 2½-inch for No. 5 bars. Bends for other bars shall be made around a pin having a diameter not less than 6 times the minimum thickness, except for bars larger than 1-inch, in which case the bends shall be made around a pin of 8 bar diameters. Bars shall be bent cold.

(c) STRAIGHTENING. Reinforcement steel shall not be straightened or rebent in a manner that will injure the metal. Bars with kinks or bends not shown on the drawings shall not be used. Heating of the reinforcement will be permitted only when approved by Engineer.

(d) PLACING. Reinforcement steel shall be accurately positioned in accordance with the drawings and secured by using annealed iron wire ties or suitable clips at intersections, and shall be supported by concrete or metal supports, spacers, or metal hangers. Metal clips or supports shall not be placed in contact with the forms. Tie wires shall be bent away from the forms in order to provide the specified concrete coverage. Bars additional to those shown on the drawings which may be found necessary or desirable by the Contractor for the purpose of securing reinforcement in position shall be provided by the Contractor at his own expense.

(e) SPLICING. When it is necessary to splice reinforcement at points other than where shown, the character of the splice shall be determined by Engineer. The lapping of splices shall be 32 bar diameters unless otherwise shown. Reinforcement bars, other than tie bars, shall not be spliced at points other than shown on the approved shop bending diagrams and placing lists. Laps of wire mesh shall be in accordance with the ACI Standard 318, and adjoining sheets shall be securely tied together with No. 14 tie wire, one tie for each 2 running feet. Wires shall be staggered and tied in such a manner that they cannot slip.

03200.04 WIRE MESH REINFORCEMENT

Mesh reinforcement shall conform to ASTM Standard A185. The gage of the wire and the dimensions of the mesh shall be as shown on the plans. The wire mesh reinforcement shall be so constructed as to retain its original shape and form during the necessary handling. The effective cross sectional area of the wire shall be equal to that specified or indicated on the plans.

END OF SECTION

SECTION 15600

PIPING REQUIREMENTS - WATER

15600.01 GENERAL

(a) The latest version of the following Standards are applicable to this Section:

American Water Works Association (AWWA)

- AWWA C104 – Cement-Mortar Lining for Ductile Iron Pipe and Fittiings
- AWWA C110 – Ductile-Iron and Gray-Iron Fittings
- AWWA C111 – Rubber-Gasket Joints for Ductile-Iron Pressure Pipe and Fittings
- AWWA C151 – Ductile-Iron Pipe, Centrifugally Cast
- AWWA C200 – Steel Water Pipe - 6 In. and Larger
- AWWA C205 – Cement-Mortar Protective Lining and Coating for Steel Water Pipe – 4 In and Larger – Shop Applied
- AWWA C207 – Steel Pipe Flanges for Waterworks Service – Sizes 4 In. Through 144 In.
- AWWA C208 – Dimensions for Fabricated Steel Water Pipe Fittings
- AWWA C900 - Polyvinyl Chloride (PVC) Pressure Pipe and Fabricated Fittings, 4 In. Through 12 In. for Water Transmission and Distribution

American Society for Testing and Materials (ASTM)

- ASTM A36 – Standards Specification for Carbon Structural Steel
- ASTM A53 - Standard Specifications for Pipe, Steel, Black and Hot-Dipped, Zinc-Coated, Welded and Seamless
- ASTM A153 – Standard Specification for Zinc Coating (Hot-Dip) or Iron and Steel Hardware
- ASTM A307 - Standard Specification for Carbon Steel Bolts and Studs, 60,000 PSI Tensile Strength
- ASTM B43 - Standard Specification for Seamless Red Brass Pipe, Standard Sizes
- ASTM B62 - Standard Specification for Composition Bronze or Ounce Metal Castings

- ASTM B88 - Standard Specification for Seamless Copper Water Tube

American National Standards Institute (ANSI)

- ANSI B16.5 – Pipe Flanges and Flanged Fittings: NPS ½ through NPS 24 Metric/Inch

(b) The Contractor shall furnish and install all pipe, fittings, closure pieces, supports, gaskets, jointing materials, and appurtenances as shown on the drawings, and specified herein, and as required for a complete and workable water distribution piping system. Where choices of pipe materials are allowed, the Contractor shall select such materials and construction methods as will result in a satisfactory completed project.

(c) Earthwork shall be as specified in Section 02200 of these Specifications.

(d) Valves and hydrants shall be as specified in Section 15620.

(e) The Contractor shall utilize experienced and competent fitters for installation of piping covered by this Division.

(f) Concrete thrust blocks and retaining blocks shall be provided in accordance with the details as shown on the Drawings.

(g) Pipe materials for the water distribution system shown on the contract drawings shall be of polyvinyl chloride water pipe (PVC) or ductile iron water pipe (DIP), unless otherwise noted. Connections of all fittings and valves shall be flanged or mechanical joint.

(h) Pipeline shall be tested and disinfected as specified in Section 15610.

15600.02 POLYVINYL CHLORIDE (PVC) PRESSURE PIPE

(a) MATERIALS. PVC pipe shall be made from all new rigid unplasticized polyvinyl chloride. PVC pipe shall be Class 150 (DR-18) or Class 200 (DR-14) as noted on the drawings and shall conform to the requirements of AWWA Standard C900. 4-inch and smaller pipe shall be minimum pressure class 200 (DR-14) .

PVC pipe shall be furnished in Cast-iron pipe equivalent outside diameters with rubber gasketed couplings. In addition to the referenced AWWA Standards, pipe handling, storage, and installation shall follow the manufacturer's instructions closely.

(b) INSTALLATION

(1) Proper and suitable tools and appliances for safe handling of pipe and fittings shall be employed. Care shall be exercised to avoid damage to pipe and fittings. All pipe and fittings shall be carefully examined by the Contractor for defects at the time of laying, and no defective pipe or fitting shall be installed.

If a defect in a pipe is discovered after it has been installed, the Engineer may waive rejection on the condition that cradling or encasement is provided or the corrective measures taken. All such work shall be done at the Contractor's expense.

(2) All pipe and fittings shall be thoroughly clean at the time of laying and shall be handled in such a manner as to maintain this condition by preventing the entrance of foreign material. Whenever workmen are absent from the job, open ends of pipe shall be kept plugged.

(3) Each section of pipe shall be accurately laid to the required line and grade and shall have a firm bearing for its full length except for a minimum distance at bell holes.

(4) After the socket and plain end are wiped clean of all sand and dirt, the plain end should be entered into the socket. It is essential that pipe fittings be kept level and in straight alignment and that the pipe sections be pulled together slowly to assure proper installation.

(5) Pipe shall not be laid using earth mounds. In order to prevent accumulations of air and to enable the pipeline to be drained, PVC pipelines shall not have any high or low points except where shown.

(6) In continuous runs of PVC or DIP pipeline, a 12-gage insulated copper wire or equivalent material shall be laid parallel with the pipeline at a 45 degree angle from the top. The wire or equivalent material shall also be looped to fire hydrants and wrapped around gate valves. Copper wire shall be continuous. Purpose of this wire is to aid in locating the pipe.

15600.03 DUCTILE IRON WATER PIPE

(a) MATERIALS. Ductile Iron Pipe shall conform to AWWA Standard C151 (ANSI A21.51-09). Unless otherwise specified, size four-inch (4") through 12-inch (12") shall be Pressure Class 350. Pressure class for pipes larger than 12 inches shall be as shown on the drawings. All pipe sizes shall be minimum Thickness Class 50, except where otherwise shown on the drawings. Except where mechanical joints or flanged joints are shown on the drawings, joints shall be of the push-on rubber gasketed type, and where shown on the drawings, the bell and spigot ends of the pipe shall be modified to provide restraint against joint movement. Joints shall be in accordance with AWWA Standard C111 (ANSI A21.11-07) and shall be "TR FLEX" as manufactured by U.S. Pipe, or equal. Fittings shall be ductile iron in accordance to the applicable requirements of AWWA Standard C110 (ANSI 21.10-08). The ends of the fittings shall be push-on, rubber gasket type, mechanical or flanged joints, as required or shown on the drawings. Restraint joint fittings shall be used when shown on the drawings and shall be in accordance with AWWA Standard C110 (ANSI A21.10-08). Fittings shall be "TR-FLEX" as manufactured by U.S. Pipe, or equal. Restraint push-on joints for pipe and fittings shall rated for a water working pressure of not less than 250 psi.

(b) LINING AND COATING. All pipe and fittings shall be mortar lined in accordance with the requirements of AWWA Standard C104 (ANSI A21.4-08). All buried pipe and fittings shall be coated with a bituminous outside coating in accordance with AWWA Standard C151 (ANSI A21.51-09) for pipe and AWWA Standard C110 (ANSI A21.10-08) for fittings.

(c) INSTALLATION

(1) Proper and suitable tools and appliances for safe handling of pipe and fittings shall be employed. Care shall be exercised to avoid damage to pipe and fittings. All pipe and fittings shall be carefully examined by the Contractor for defects at the time of laying, and no defective pipe or fitting shall be installed. If a defect in a pipe is discovered after it has been installed, the Engineer may waive rejection on the condition that cradling or encasement is provided or the corrective measures taken. All such work shall be done at the Contractor's expense.

(2) All pipe and fittings shall be thoroughly clean at the time of laying and shall be handled in such a manner as to maintain this condition by preventing the entrance of foreign material. Whenever workmen are absent from the job, open ends of pipe shall be kept plugged.

(3) Each section of pipe shall be accurately laid to the required line and grade and shall have a firm bearing for its full length except for a minimum distance at bell holes.

(4) After the socket and plain end are wiped clean of all sand and dirt, the plain end should be entered into the socket. It is essential that pipe and fittings be kept level and in straight alignment and that the pipe sections be pulled together slowly to assure proper installation.

15600.04 CAST IRON PIPE

Not Used by DWP

15600.05 STEEL PIPE

(a) GENERAL

(1) Fabricated steel pipe includes all pipe with lining and with or without coating, which is fabricated from steel plate or sheet. Pipe sizes shown refer to inside diameter after lining, except that pipe to be assembled with flexible couplings shall have outside diameter equivalent to schedule 40 wrought steel pipe of the same nominal diameter, except as otherwise noted. Fabricated steel pipe shall be used for all reservoir, booster station, and well piping as shown on the plans.

(2) Steel cylinders for pipe and fittings shall conform to AWWA Standard C200 and C208 and except as otherwise shown or specified, fittings shall

be equal in strength to the adjoining pipe and shall have dimensions conforming to AWWA Standard C208. All elbows shall be long radius, unless otherwise specified. Minimum thickness for steel cylinder shall be 10 gauge.

(3) Except as otherwise shown, all buried pipe shall have welded ends.

(4) Unless otherwise indicated or specified, pipe less than 4-inches in diameter shall be steel pipe conforming to the requirements of ASTM Standard A53. Unless otherwise designated, it shall be of the wall thickness known as Schedule 40.

(b) PIPE FLANGES

(1) Steel slip-on and welding-neck flanges for flanged joints, where required, shall be 150 pound forged steel flanges conforming to ANSI Standard B16.5, or they may be steel plate ring flanges conforming to AWWA Standard C207, Class D with hubs omitted. Blind flanges shall also conform to the foregoing.

(2) Flanges shall be flat faced, suitable for use with full face gaskets. Faces of flanges shall have a serrated finish of approximately 32 serrations per inch and approximately 1/64-inch deep. Serrations may be either spiral or concentric.

(3) Slip-on flanges conforming to ANSI Standard B16.5 may be faced prior to welding to the pipe or fitting to which they are attached, provided that care is exercised in the welding process to prevent warping of the flanges. Final machining of the contact faces of slip-in flanges conforming to AWWA Standard C207 shall be performed after the flange has been welded to the pipe.

(4) Flanges shall be attached to the pipe and fittings and installation of the pipe and fittings shall be such that the bolt holes straddle the vertical axis of the pipe.

(c) CEMENT MORTAR LINING AND COATING. Steel pipe and fittings shall be cement mortar lined (100% on inside of pipe) and cement mortar coated (coating required for pipes below grade) in accordance with the requirements of AWWA Standard C205.

15600.06 RED BRASS PIPE

Brass pipe shall conform to the requirements of ASTM Standard B43. Fittings shall be of bronze conforming to the requirements of ASTM Standard B62.

15600.07 COPPER PIPE

Copper pipe shall conform to the requirements of ASTM Standard B88, and shall be Type K (soft). Fittings shall be compression type with locknut and shall be of cast bronze or forged brass containing 85 percent copper.

15600.08 MECHANICAL-TYPE COUPLINGS

Mechanical-type couplings shall be designed for a water working pressure not less than the design pressure of the pipe on which they are to be installed, and shall be equipped with Grade H rubber gaskets. Couplings shall be Gustin-Bacon, Victaulic Style 44, or equal, when pipe ends are banded, and Gustin-Bacon No. 100, Victaulic Style 77, or equal, when pipe ends are grooved. Buried or submerged couplings shall be provided with Type 18-8 stainless steel bolts and nuts.

15600.09 SLEEVE-TYPE COUPLINGS

Sleeve-type couplings shall be provided where shown, and shall be Smith-Blair, Style 411 (straight) or Style 413 (transition); Dresser, Style 38; Romac Style 501; or equal. Couplings shall be of steel with steel bolts, without pipe stop, and shall be of sizes to fit the pipe and fittings shown. The middle ring shall be not less than 1/2-inch in thickness and shall be either 5- or 7-inches long for standard steel couplings, and 16-inches long for long-sleeve couplings. Bolts for sleeve-type couplings shall be hot-dip galvanized.

15600.10 GASKETS

(a) Except as otherwise provided, gaskets for flanged joints shall be 1/16-inch thick laminated asbestos fiber.

(b) Wherever blind flanges are shown, the gaskets shall consist of 1/8-inch thick cloth-inserted rubber sheet which shall cover the entire inside surface of the blind flange and shall be cemented to the surface of the blind flange.

15600.11 BOLTS

(a) The Contractor shall furnish and set all bolts and anchor bolts. Except where otherwise shown or specified, all bolts, anchor bolts, and nuts shall be steel, galvanized after fabrication in accordance with ASTM Standard A153. Threads on galvanized bolts and nuts shall be formed with suitable taps and dyes such that they retain their normal clearance after hot-dip galvanizing.

(b) Except as otherwise provided, steel for bolts, anchor bolts and cap screws shall be in accordance with ASTM Standard A307 or threaded parts in accordance with ASTM Standard A36 and shall meet the following additional requirements: (1) the nut material shall be free cutting steel, and (2) the nuts shall be capable of developing the full strength of the bolts. Threads shall be Coarse Thread Series conforming to the requirements of the American Standard for Screw Threads. All bolts and cap screws have hexagon heads and nuts shall be heavy hexagon series.

(c) Where specified or shown, all bolts, anchor bolts and nuts which are buried, submerged, or below the top of the wall inside any hydraulic structures shall be of Type 18-8 stainless steel.

15600.12 COATING - BURIED MISCELLANEOUS FERROUS SURFACES, VALVES, AND FLANGED JOINTS (EXCLUDING PIPE)

(a) SURFACE PREPARATION. Surfaces shall be thoroughly cleaned of all oil, grease, or other foreign materials.

(b) COATINGS. Rich cement mortar coating to a minimum thickness of 1/8-in, following which such surfaces shall be enclosed in 8-mil thick polyethylene sheet with all joints and edges lapped and sealed with tape.

15600.13 PIPE INSULATION

(a) Above ground exposed piping at reservoirs, wells and pump stations (including valves and fittings) shall be insulated with 1-inch thick Johns-Manville Micro-Lok V.B., Owens-Corning Dual Temp, or equal. Pipe insulation shall be installed in accordance with manufacturer's recommendations. Butt joints shall be wrapped with a 4-inch strip of vapor barrier jacket completely cemented with vapor barrier adhesive. Ends of insulation shall be sealed off at all valves, fittings, and flanges. All pipe insulation shall be finished with 6 oz. canvas pasted in place and sized with Foster, Arabol, or equal, lagging adhesive.

(b) Valves and fittings shall be insulated by wrapping with fabricated pipe insulation to a thickness equal to the adjoining insulation, secured with jute twine and covered with a 1/4-inch thick coat of plastic insulating cement. When thoroughly dry, finish by applying a full 1/8-inch thick coat of asphalt mastic to completely vapor seal. All exposed valves, fittings, and flanges shall be canvas jacketed and sized.

(c) Pipe hangers shall be installed outside of insulation, provided with a load bearing segment of cork pipe insulation not less than 18-inches in length and a protective 12-inches long, 18-gauge galvanized steel shield covering lower half of insulation.

(d) Insulation shall be applied after piping has been installed, tested, and approved and after pipes are in a dry and clean condition.

(e) Piping exposed to weather shall be weatherproofed by covering with 0.016 thick aluminum jacket secured with 1/2-inch wide aluminum bands.

END OF SECTION

SECTION 15610

TESTING AND DISINFECTING

15610.01 GENERAL

The latest version of the following Standards are applicable to this Section:

American Water Works Association (AWWA)

- AWWA C600 – Installation of Ductile Iron Mains and Their Appurtenances
- AWWA C605 – Underground Installation of Polyvinyl Chloride (PVC) Pressure Pipe and Fittings for Water
- AWWA C651 – Disinfecting Water Mains

The Contractor shall furnish all equipment, labor, and materials required for testing and disinfecting pipelines as specified. Disinfection shall be accomplished by chlorination. All testing, chlorinating and operations shall be done in the presence of the DWP Inspector. Disinfection shall be limited to pipelines designed for potable water service. Disinfection operations shall be scheduled by the Contractor as late as possible during the Contract time period so as to assure the maximum degree of sterility of the facilities at the time the work is accepted by the Owner. Release of water from pipelines after testing and disinfecting have been completed shall be as directed by the Engineer or Owner's Representative.

15610.02 TESTING OF PIPING

Prior to testing, all piping (including blow-offs, flushouts, hydrants, and water service laterals etc.) shall be flushed or blown out as appropriate. The Contractor shall test all piping which include the mainline, blowoff and hydrant laterals, air release valve laterals, and water service laterals, either in sections or as a unit. Mortar-lined piping shall not be tested before the mortar lining has attained an age of 14 days. The test shall be made by closing valves when available, or by placing temporary bulkheads in the pipe and filling the line slowly with water. Care shall be taken to see that all air vents are open during filling. Pressure and leakage test shall be performed in accordance with AWWA Standard C600 for Ductile Iron Pipelines and in accordance with AWWA Standard C605 for PVC pipelines.

Separate tests shall be performed for structural (hydrostatic) and leakage requirement. After trenches are backfilled and compacted, the pipelines shall be subjected to a structural hydrostatic pressure test of one and one-half (1-1/2) times the allowable working pressure for the class of pipe to be tested for a period of four hours. Any noticeable leaks shall be stopped and any defective pipe shall be repaired and replaced with new sections and retested as specified above.

Following the completion of the structural hydrostatic pressure test, the pipeline shall be subjected to a leakage test for a period of one hour one and one-half (1-1/2) times the working pressure for the class of pipe being tested. The water necessary to maintain this pressure shall be measured by the amount of water withdrawn from a fixed vessel, such as a barrel. The leakage shall be considered as the amount of water entering the pipe during the test less any measured leakage through valves or bulkheads. Leakage shall not exceed the rate of 30 gallons per inch of diameter per 24 hours per mile of pipe. Any noticeable leaks shall be stopped and all repairs made necessary to obtain the above leakage test result.

15610.03 DISINFECTING PIPELINES

(a) After the pressure testing and before being placed in service, the system to be connected shall be thoroughly flushed and then disinfected in accordance with AWWA Standard C651. Chlorine shall be fed at a constant rate such that the water will have not less than 80 mg/L of free chlorine. Disinfection shall include the mainline, blowoff and hydrant laterals, air release valve laterals and water service laterals. The tablet method and the slog method will not be permitted. All necessary chlorine used for disinfection shall be furnished by the contractor.

(b) After the initial flushing, the system shall be chlorinated and allowed to seat for a period not less than 48 hours. After this initial period, it should be flushed to a minimum chlorine residual of 25 mg/L and allowed to seat again for a period not less than 24 hours. At the end of the second period water samples shall be taken for bacteriological analysis.

(c) The system shall be thoroughly flushed before and after chlorination at a location determined by the DWP inspector. If the first application of chlorine is not sufficient to clear system of coliform bacteria, the procedure shall be repeated until the water will meet the bacteriological drinking water standards as set forth in the "State of California Department of Public Health Drinking Water Standards".

(d) Bacteriological tests shall be performed by the DWP.

(e) The first laboratory test will be paid for by the DWP. If additional testing is required, the Contractor shall pay for testing and transportation of samples.

END OF SECTION

SECTION 15620

VALVES AND HYDRANTS

15620.01 GENERAL

(a) The latest version of the following Standards are applicable to this Section:

American Water Works Association (AWWA)

- AWWA C500 – Metal Seated Gate Valves for Water Supply Service
- AWWA C502 – Dry-Barrel Fire Hydrant
- AWWA C504 – Rubber Seated Butterfly Valves, 3 In. Through 72 In.
- AWWA C508 – Swing-Check Valves for Waterworks Service, 2 In. through 24 In.
- AWWA C515 – Reduced-Wall Resilient-Seated Gate Valves for Water Supply Service
- AWWA C550 – Protective Interior Coatings for Valves and Hydrants

American Society for Testing and Materials (ASTM)

- ASTM B62 - Standard Specification for Composition Bronze or Ounce Metal Castings

Society for Protective Coating (SSPC)

- SSPC SP-2 – Hand Tool Cleaning
- SSPC SP-5 – White Metal Blast Cleaning

(b) The Contractor shall furnish and install all valves and hydrants as shown and specified. In addition, valve-operating units, stem extensions and other accessories shall be furnished and installed by the Contractor where required. Where buried valves are indicated, the Contractor shall also furnish and install valve boxes to grade. All valves shall be new and of current manufacture.

(c) The flanges of valves may be raised or plain faced. Flanges of valves for water-working pressures of 175 psi or less shall be faced and drilled to 125 pound American Standard template. Flanges of valves for water-working pressures greater than 175 psi shall be faced and drilled to 250 pound American Standard template.

(d) Unless otherwise specified, each valve body shall be tested under a test pressure equal to twice its design water-working pressure.

(e) Unless otherwise specified, all interior bronze parts of valves except gate valve stems, shall conform to the requirements of ASTM Standard B62. Gate valve stems shall be of bronze containing not more than five percent of zinc nor more than two

percent of aluminum, and shall have a minimum tensile strength of 60,000 psi, a yield strength of 40,000 psi, and an elongation of at least 10(%) percent in 2-inches, as determined by a test coupon poured from the same ladle from which the valve stems to be furnished are poured.

(f) Except where otherwise provided, ferrous surfaces, exclusive of stainless steel surfaces, in the water passages of all valves four-inch and larger, as well as the exterior surfaces of all submerged valves, shall be epoxy coated as specified in this Section.

(g) Unless noted or otherwise specified, all valves except those buried shall be provided with a manual operator of the handwheel type.

(h) Wrench nuts shall be provided on all buried valves. Valve nuts deeper than 4 feet from finished grade shall be provided with valve extensions. Unless otherwise directed by the Engineer, all wrench nuts shall comply with AWWA Standard C500. Not less than two operating keys shall be furnished for operation of the wrench nut operated valves.

(i) All buried valves shall be provided with valve boxes. Valve boxes shall be SDR-35 PVC with 18-inch galvanized steel sleeve extension, suitable for the depth of cover over the pipeline as required. Valve boxes shall not be less than 8-inches in diameter and shall be provided with suitable cast iron covers. Covers shall have cast thereon an appropriate name "water" designating the service for which the valve is used. Valve covers shall be coated by dipping in hot bituminous varnish. Valve box covers shall be manufactured by Alhambra Foundry; No. A-29606, or approved equal.

(j) Fire hydrants, blowoffs, air release valves, services and snow pole barricades shall be installed as on shown the plans and at the locations as indicated in the field by the inspector. All hydrants, blowoffs, air release valves, services, valve cans, and snow poles shall be installed plumb and vertical. Snow poles shall be painted identical color of hydrants, blowoffs or flushouts.

15620.02 EPOXY COATING

(a) GENERAL. Epoxy coating shall comply with AWWA Standard C550. Where specified or shown, an epoxy coating shall be applied as specified herein.

(b) MATERIAL

(1) Except as otherwise provided herein, the material used shall be 100 percent powder epoxy and shall be 3-M Company "Scotchkote 134", Michigan Chrome and Chemical Company "Miccron 650 or 651", or equal.

(2) Where, in the Engineer's opinion, because of the nature of the item being coated, it would be impossible to use the powder epoxy method without causing damage to the item, the use of a liquid epoxy will be permitted. Liquid epoxy shall be 3-M Company No. 323, SOC-CO Plastic Coating Co. Keysite 740, or equal.

(c) SURFACE PREPARATION. The surface shall be blast-cleaned in accordance with SSPC Standard SP-5. The grit size used shall be as recommended by the epoxy manufacturer.

(d) APPLICATION. Application of the epoxy coating shall be in accordance with the manufacturer's instructions, provided that, if liquid epoxy is permitted, it shall be applied in not less than three spray coats to give the required total thickness.

(e) THICKNESS OF COATING. The minimum dry coating thickness shall be 8 mils, except that the thickness of coating in the grooves for valves or fittings designed to receive a rubber gasket shall be approximately 5 mils.

(f) INSPECTION. Coating thickness shall be checked with a non-destructive magnetic-type thickness gage. Coating integrity shall be tested with a sponge testing unit operating at approximately 60 volts. All pinholes shall be marked, repaired and retested. No pinholes or other irregularities will be permitted in the final coating.

(g) FIELD REPAIRS. If small local repairs are necessary, they shall be made using a liquid epoxy recommended by the manufacturer of the epoxy with which the item was initially coated. The surface must first be hand-tool cleaned in accordance with SSPC Standard SP-2. The repair epoxy material shall be applied in accordance with the manufacturer's instructions.

15620.03 GATE VALVES

Resilient-seated gate valves shall conform to AWWA Standard C515. Resilient-seated gate valves shall be designed for a water working pressure of 200 psi and shall be iron bodied, iron gate encapsulated with vulcanized rubber or polyurethane, non-rising stem opening to the left, and provided with two o-ring stem seals, and a two inch square operating nut.

All interior parts of gate valves, except the gate and valve stem, shall be constructed of bronze conforming to the requirements of ASTM Standard B62. Gate valve stems shall meet the requirements of subsection G-1. All ferrous parts of the valve, inside and out except the gate, shall be coated with fusion bonded epoxy. The manufacturer's name or symbol, the size of the valve, the year of manufacture, and the working water pressure shall be encased in the bonnet or body of the valve. Each valve shall be tested to twice the working pressure. Valves shall be furnished with ends as specified on the plans or by the inspector. Approved types: (a) Mueller A-2360 Series, (b) Clow Model 2638, or (c) DWP Engineer's approved equal.

15620.04 BUTTERFLY VALVES

Butterfly valves for water service shall conform to AWWA Standard C504. Valves shall be tight-closing, rubber seated, cast iron disc with bronze or stainless steel seating edge, opening to the left (counter-clockwise), and provided with a 2-inch square operating nut or handwheel (as shown). The valve seat shall be bonded into a machined groove in the valve body or be natural bonded to a stainless steel retaining ring secured to the disc by stainless steel screws. Valves shall be flanged or have ends

to match the pipe and O-ring seals. Ferrous surfaces in the water passages of the valves, 4-inch and larger, shall be epoxy coated. Butterfly valves shall be designed for a water working pressure of 150 psi or 250 psi. Valves shall be as manufactured by Mueller, Pratt or approved equal.

15620.05 SILENT CHECK VALVES

Valves shall be flanged, globe style, designed for water working pressure of 150 psi or 250 psi. Body shall be cast iron with bronze plug and seat and T302 stainless steel spring. The valve plug shall center guided at both ends with a thru integral shaft and spring loaded. Check valve shall be as manufactured by APCO Series 600, or equal.

15620.06 SWING CHECK VALVES

Swing check valves shall conform to AWWA Standard C508 and shall be of the outside lever and spring or weight type, designed for a water-working pressure of 150 psi or 250 psi, and shall have flanged cover pieces to provide access to the disc. Ferrous surfaces, 4-inch diameter and larger, shall be epoxy-coated. Swing check valves shall be manufactured by Mueller (A-2600 Series), Kennedy, or approved equal.

15620.07 AIR VACUUM AND AIR RELEASE VALVES

Air vacuum and air release valves shall be of the size shown and shall have flanged or screwed ends to match piping. Bodies shall be of high-strength cast iron. The float, seat, and all moving parts shall be constructed of Type 18-8 stainless steel. Seat washers and gaskets shall be of material ensuring water tightness with a minimum of maintenance. Valves shall be designed for minimum 150 psi water-working pressure and shall be equipped with butterfly valve and surge check valve. Air and vacuum valves shall be APCO 1200 Series, or approved equal.

15620.08 AIR RELEASE VALVES

Air release valves shall be of the size shown and shall meet the same general requirements as specified for air-vacuum and air release valves except that air-vacuum feature will not be required. They shall have stainless steel float and trim, and shall be designed for a minimum working pressure of 150 psi. Air release valves (compound lever) shall be APCO 200A, or equal.

15620.09 CORPORATION STOPS

Unless otherwise shown, corporation stops shall be Ford Meter Box Company, or equal, and shall be of brass.

15620.10 PRESSURE GAUGES

Unless otherwise shown, pressure gauges shall have a 3 1/2-inch dial, 1/4-inch threaded connection and shut-off cock. Gauges shall be calibrated to read to 150 percent of the working pressure of the pipe or vessel to which they are connected. Gauges attached to systems involving chemical solutions, sludge, sewage or other

liquids containing solids, shall be equipped with diaphragm seals. Gauges shall be as manufactured by U.S. Gauge, Foxboro, or equal.

15620.11 WATER PRESSURE REDUCING VALVES

Water pressure reducing valves shall maintain a constant downstream pressure regardless of fluctuations in demand and shall also close tight when a pressure reversal occurs. The valve shall be hydraulically-operated, pilot-controlled, diaphragm type with cast iron body and stainless steel trim. The main valve shall have a single removable seat and a resilient disc. No external packing glands are permitted, and there shall be no pistons operating the main valve or any pilot controls. The valves shall have a pressure rating of not less than 150 psi, shall have 150-lb or 300-lb flanges, and shall have an adjustable downstream pressure range with a downstream setting as required. The valves shall be Cla-Val No. 92G-01BCSKC with stainless steel trim, or equal.

15620.12 WATER PRESSURE RELIEF VALVE

The valve shall maintain constant upstream pressure by by-passing or relieving excess pressure, and shall maintain close pressure limits without causing surges. The main valve shall be of the hydraulically-operated, pilot-controlled, diaphragm type, and shall have a single removable seat and resilient disc. No external packing glands shall be permitted, and the diaphragm shall not be used as a seating surface. The pilot control shall be a direct-acting, adjustable, spring-loaded, diaphragm valve, designed to permit flow when controlling pressure exceeds spring setting. The pilot control system shall operate such that as excess pressure is dissipated the main valve shall gradually close to a positive, drip-tight seating. Pressure relief valves shall be class 150 or 300 and shall be Cla-Val No. 50 Series, or equal.

15620.13 FIRE HYDRANT, FLUSHOUTS AND BLOW-OFF ASSEMBLY

Fire Hydrants shall be the "dry barrel type" and Waterous WB67-250DDP with 6-inch hydrant shoe inlet size, 5-1/4-inch hydrant valve size, and two 2-1/2-inch National Standard hose thread outlets, and one 4-inch California Standard thread pumper outlet per AWWA Standard C502. Blow-offs and flushouts shall be the “dry barrel type” and be Waterous WB67-250DD with 4-inch MT inlet, 5¼-inch valve size and two 2½-inch National Standard hose thread outlets. The hydrants and blow-offs are to be traffic model with O-ring seals on operating stems separating threads from water chamber, having features to oil or grease lubricate threads, or permanent lubrication, having break-a-way features on barrel and shaft and mechanical joint shoe. Fire hydrant flushouts and blow-off assemblies shall be installed with lateral length as shown on the Drawings or shall be modified to meet field conditions or as directed by the Engineer. Fire hydrant, flushouts and blow-offs shall be provided with one coat of surface primer and shall be finished coated in accordance with DWP requirements.

END OF SECTION

Standard Drawings

TABLE OF CONTENTS - STANDARD DRAWINGS

Standard Drawing No.	Title
1	Protection of Utility Water Lines from Sanitary Sewers
2	Pipe Backfill in Trenches
3	Thrust Block Detail
4	Typical Valve and Valve Box Detail
5	Air and Vacuum Valve Assembly
6	Fire Hydrant Assembly
7	Flush-Out Detail
8	Blow-Out Detail
9	2" Blow Off Detail
10	Barricade / Snow Pole Detail
11	Typical Service Connection for 1" Meters
12	Typical Service Connection for 1-1/2" and 2" Service
13	Typical Service Preset for 1" Meters
14	Water Service Location Detail
15	Hillside Water Meter Installation Detail Upslope and Downslope
16	4" or 6" Double Check Backflow Assembly
17	1" or 2" Reduced Pressure Principle Backflow Device
18	Pressure Reducing Station
19	Typical Drop Section
20	Freeze Proof Hydrant for 1" Meters

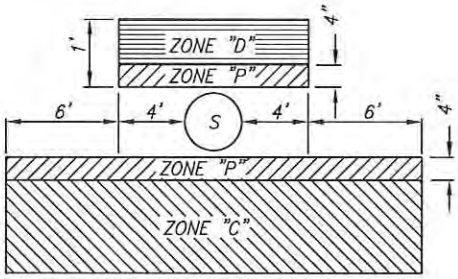

PERPENDICULAR CROSSING

SANITARY SEWERS AND UTILITY WATER LINES

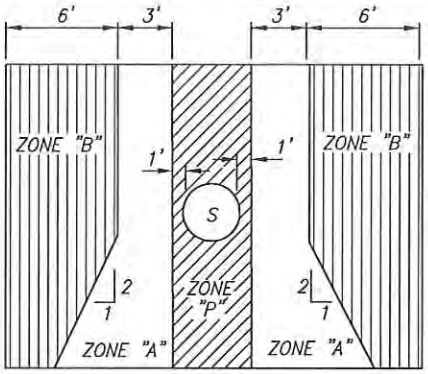

PARALLEL CONSTRUCTION

SANITARY SEWERS AND UTILITY WATER LINES

ZONE "P"	*WATER MAIN CONSTRUCTION IN THIS ZONE IS PROHIBITED.*
ZONE "A"	*NO WATER MAINS SHALL BE CONSTRUCTED IN THIS ZONE WITHOUT APPROVAL FROM THE HEALTH AGENCY.*
ZONE "B"	*WATER MAINS IN THIS ZONE SHALL BE CONSTRUCTED OF SPECIAL PIPE AS LISTED BELOW.*
ZONE "C"	*WATER MAINS SHALL HAVE NO JOINTS WITHIN ZONE "C" AND SHALL BE CONSTRUCTED OF SPECIAL PIPE AS LISTED BELOW.*
ZONE "D"	*WATER MAINS SHALL HAVE NO JOINTS WITHIN ZONE "D" AND SHALL BE CONSTRUCTED OF SPECIAL PIPE AS LISTED BELOW.*

SPECIAL PIPE ALTERNATIVES:

1. *DUCTILE IRON PIPE WITH HOT DIP BITUMINOUS COATING.*
2. *DIPPED AND WRAPPED ONE-FOURTH INCH THICK WELDED STEEL PIPE.*
3. *CLASS 200 PRESSURE RATED PLASTIC WATER PIPE (DR 14 PER AWWA C900) OR EQUIVALENT.*
4. *REINFORCED CONCRETE PRESSURE PIPE, STEEL CYLINDER TYPE, PER AWWA (C300-74 OR C301-79 OR C303-70).*

REV.	REVISION DESCRIPTION	BY	DATE

DEPARTMENT OF WATER AND POWER
CITY OF BIG BEAR LAKE

PROTECTION OF UTILITY WATER LINES FROM SANITARY SEWERS AND STORM DRAINS

APPROVED

GENERAL MANAGER — DATE 2-2-12

STANDARD DRAWING No. 1

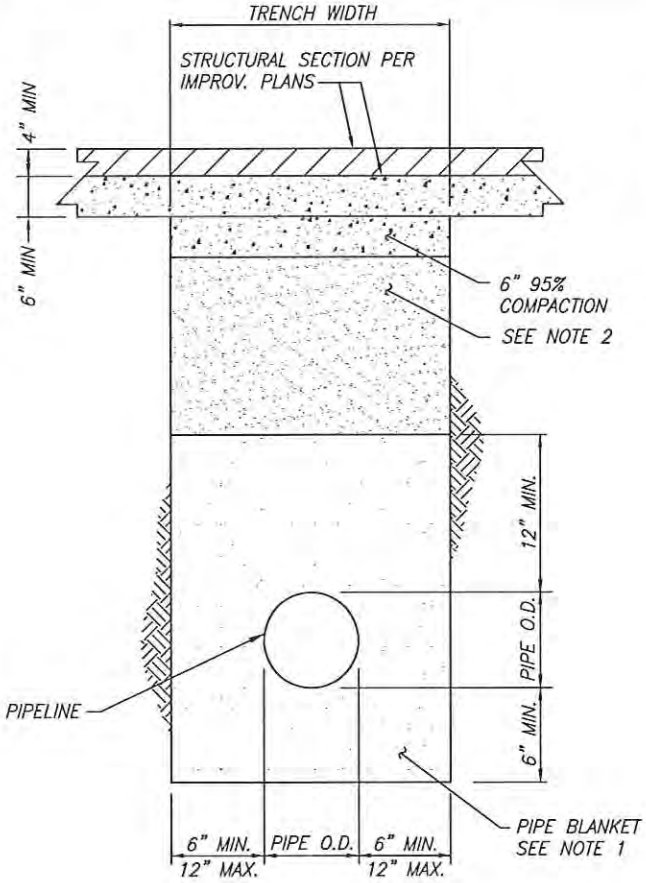

TYPE A — NEW CONSTRUCTION

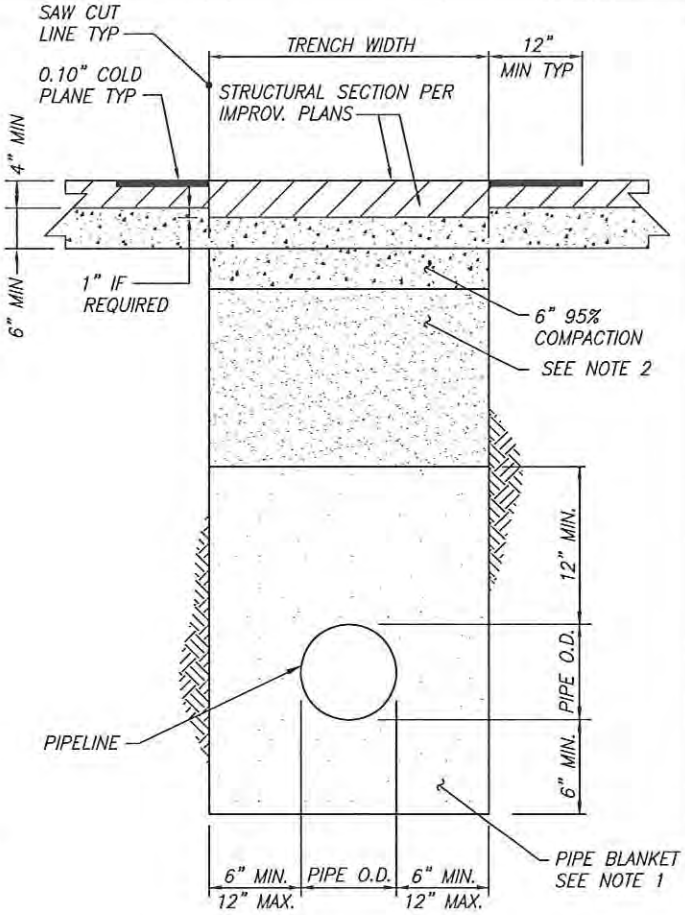

TYPE B — EXISTING PAVEMENT

NOTES

1. BACKFILL WITHIN PIPE BLANKET SHALL BE IMPORTED SAND WITH S.E. 60 (90% RELATIVE COMPACTION).
2. BACKFILL ABOVE PIPE BLANKET MAY BE APPROVED MATERIAL FROM TRENCH EXCAVATION WITH 90% RELATIVE COMPACTION AND 95% RELATIVE COMPACTION IN THE TOP 6 INCHES. IN PAVED AREAS, THE REPLACEMENT SECTION SHALL BE THE EXISTING PLUS 1" A.C. OR 4" A.C., WHICHEVER IS GREATER.
3. THE CONTRACTOR HAS THE OPTION OF REPLACING CRUSHED AGGREGATE BASE WITH A.C. AT THE RATIO OF 1" A.C. FOR 2" CLASS II BASE P.C.C. PAVEMENT SHALL BE REPLACED IN KIND PLUS 1".
4. IF UNSUITABLE MATERIAL IS ENCOUNTERED, ADDITIONAL BEDDING MAY BE REQUIRED BY DWP INSPECTOR.
5. MINIMUM COVER SHALL BE 42" FOR WATER MAINS.
6. MINIMUM STRUCTURAL SECTION SHALL BE 4" A.C. OVER 6" CLASS II BASE. THE REQUIRED STRUCTURAL SECTION MAY BE GREATER IF REQUIRED BY THE CITY OF BIG BEAR LAKE ENGINEERING DEPARTMENT, OR BY THE COUNTY OF SAN BERNARDINO.
7. COMPACTION TESTS SHALL BE IN COMPLIANCE WITH THE CITY OF BIG BEAR LAKE ENGINEERING DEPARTMENT, OR THE COUNTY OF SAN BERNARDINO.

REV.	REVISION DESCRIPTION	BY	DATE

DEPARTMENT OF WATER AND POWER
CITY OF BIG BEAR LAKE

PIPE BACKFILL IN TRENCHES

APPROVED

GENERAL MANAGER — DATE 2-2-12

STANDARD DRAWING No. 2

BEARING AREA (SQ. FT.)

DIA.	TEE	HYDRANT	DEAD END	90° BEND	45° BEND
6"	3	3	3	5	3
8"	7	7	7	9	7
10"	9	9	9	14	9
12"	14	14	14	18	14
14"	18	18	18	25	18
16"	23	23	23	23	23
18"	30	30	30	41	30
20"	36	36	36	50	36
22"	43	43	43	61	43
24"	52	52	52	79	52

NOTES

1. THRUST BLOCK BEARING AREA BASED ON 225 PSIG. SIZE THRUST BLOCK FOR TEST PRESSURE OF PIPELINE. FOR DIFFERENT TEST PRESSURES, MODIFY SIZE OF AREA SHOWN ACCORDINGLY.
2. ALL THRUST BLOCKS SHALL BE CLASS "A" CONCRETE AND PLACED AGAINST UNDISTURBED SOIL. INSPECTOR WILL DETERMINE SIZE NOT SHOWN.
3. THRUST BLOCKS ON CROSSES SHALL BE USED.
4. REINFORCING STEEL SHALL BE MIN. NO. 4 AND CONFORM TO A.S.T.M. SPECIFICATIONS A615 GRADE 40.
5. A PLASTIC WRAP BARRIER SHALL BE PLACED BETWEEN THRUST BLOCK AND DUCTILE SURFACE.
6. IF RESTRAINED JOINTS ARE CALLED OUT ON THE CONSTRUCTION DRAWINGS, THRUST BLOCKS SHALL BE DELETED.
7. DWP'S INSPECTOR MAY REQUIRE THE USE OF MEGALUGS OR OTHER RESTRAINED JOINTS FOR RESTRAINING PURPOSES, INSTEAD OF, OR IN ADDITION TO, THRUST BLOCKS AT HIS DISCRETION.
8. VERTICAL BEND THRUST BLOCKS SHALL BE DESIGNED BY A CIVIL ENGINEER AND APPROVED BY DWP.

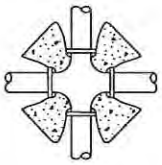

CROSS

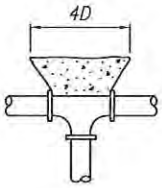

TEE

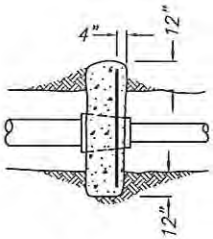

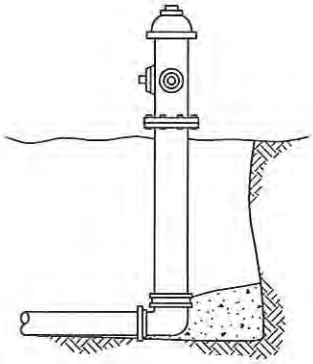

FIRE HYDRANT

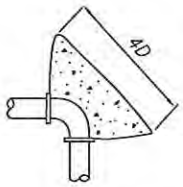

90° BEND

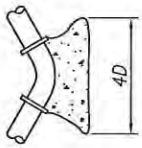

BENDS LESS THAN 90°

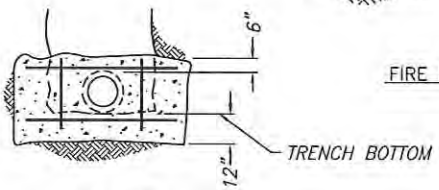

REDUCER

REV.	REVISION DESCRIPTION	BY	DATE

DEPARTMENT OF WATER AND POWER
CITY OF BIG BEAR LAKE

THRUST BLOCK DETAIL

APPROVED

GENERAL MANAGER — DATE 2-2-12

STANDARD DRAWING No. 3

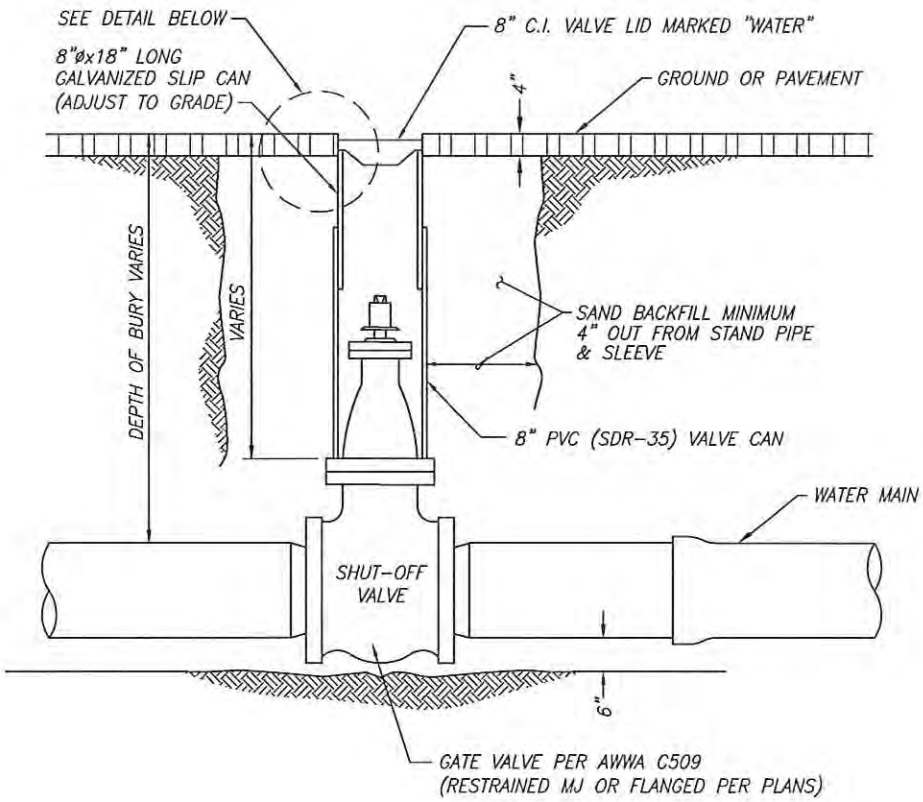

NOTES:

1. THE CONTRACTOR SHALL BE RESPONSIBLE FOR RAISING VALVE CANS AFTER PROJECT COMPLETION AND/OR STREET PAVING.
2. SHUT-OFF VALVES ARE NOT TO BE INSTALLED UNLESS APPROVED BY DWP.

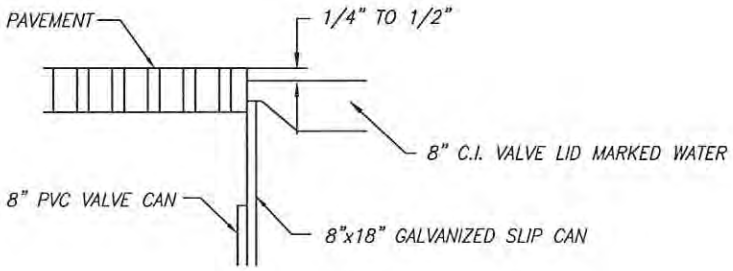

DETAIL

REV.	REVISION DESCRIPTION	BY	DATE

DEPARTMENT OF WATER AND POWER
CITY OF BIG BEAR LAKE

TYPICAL VALVE AND
VALVE BOX DETAIL

APPROVED

GENERAL MANAGER — DATE 2-2-12

STANDARD DRAWING No. 4

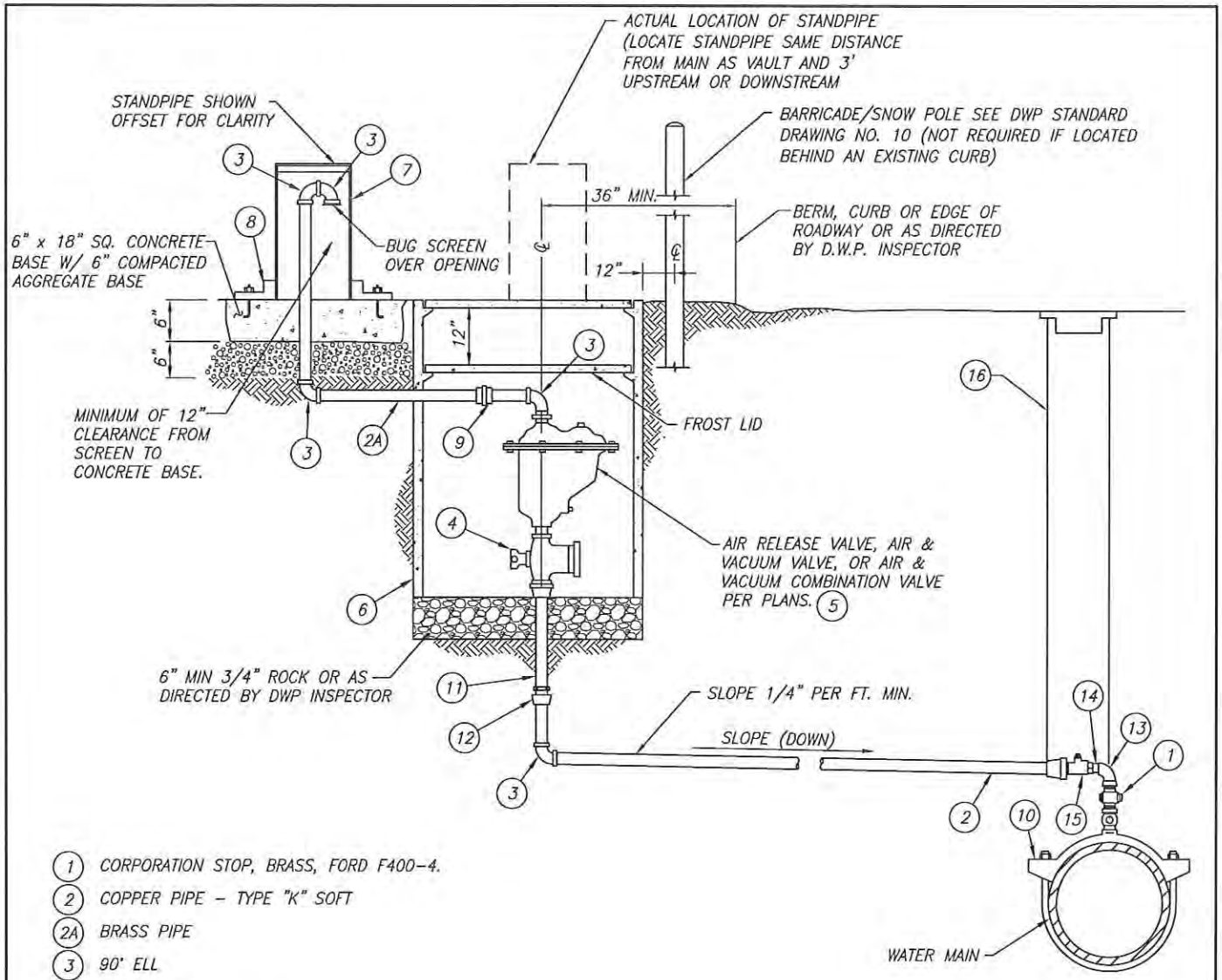

NOTES

1. SIZE OF PIPE, FITTINGS, & VALVES SHALL CONFORM TO THE SIZE OF THE AIR AND VACUUM VALVE. PAINT ABOVE
2. GRADE PIPING WITH RUST-OLEUM 659 YELLOW OR APPROVED EQUAL PRIMER & 2 COATS.
3. ALL PIPE AND FITTINGS SHALL BE COPPER OR BRASS.

REV.	REVISION DESCRIPTION	BY	DATE

DEPARTMENT OF WATER AND POWER
CITY OF BIG BEAR LAKE

AIR AND VACUUM VALVE ASSEMBLY

APPROVED

GENERAL MANAGER — DATE 2-2-12

STANDARD DRAWING No. 5

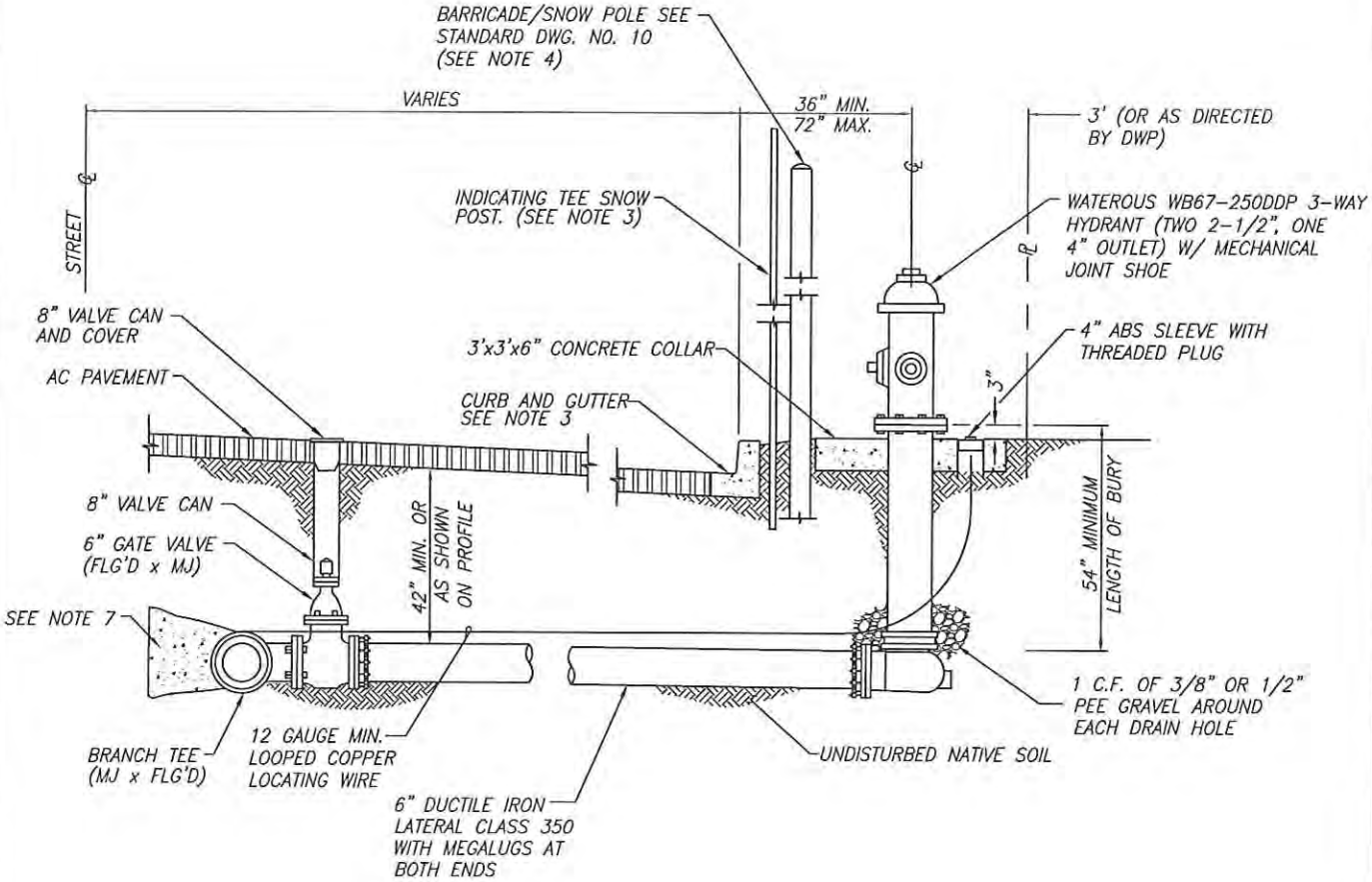

NOTES:

1. WRAP PLASTIC AROUND PARTS REQUIRING THRUST BLOCKS OR PIERS.
2. WEEP HOLE ON HYDRANT BARREL MUST BE CLEAR OF OBSTRUCTIONS.
3. ON ROADS WITH CURBS AND GUTTERS, INSTALL "INDICATING TEE" SNOW POST (6' ABOVE GRADE). LOCATE POST ON ONCOMING SIDE OF TRAFFIC.
4. ON ROADS WITHOUT CURBS, FIRE HYDRANTS SHALL BE LOCATED WITHIN THE RIGHT-OF-WAY, AT A MINIMUM THREE FEET FROM THE EDGE OF ASPHALT AND TWO FEET CLEAR FROM THE PROPERTY LINE, UNLESS OTHERWISE DIRECTED BY THE DWP INSPECTOR. UNDER LIMITED RIGHT-OF-WAY CONDITIONS INSTALL PER DWP INSPECTOR. PROVIDE BARRICADE POST AS SHOWN ON STANDARD DRAWING NO. 10.
5. THE HYDRANT SHALL BE PAINTED WATEROUS YELLOW VISTA PAINT CODE VP-06-10070.
6. SNOW POLE OR BARRICADE SHALL BE PAINTED IDENTICAL COLOR OF HYDRANT.
7. THRUST BLOCK REQUIRED ON EXISTING MAINS ONLY.

REV.	REVISION DESCRIPTION	BY	DATE

DEPARTMENT OF WATER AND POWER
CITY OF BIG BEAR LAKE

FIRE HYDRANT ASSEMBLY

APPROVED

GENERAL MANAGER — DATE 2-2-12

STANDARD DRAWING No. 6

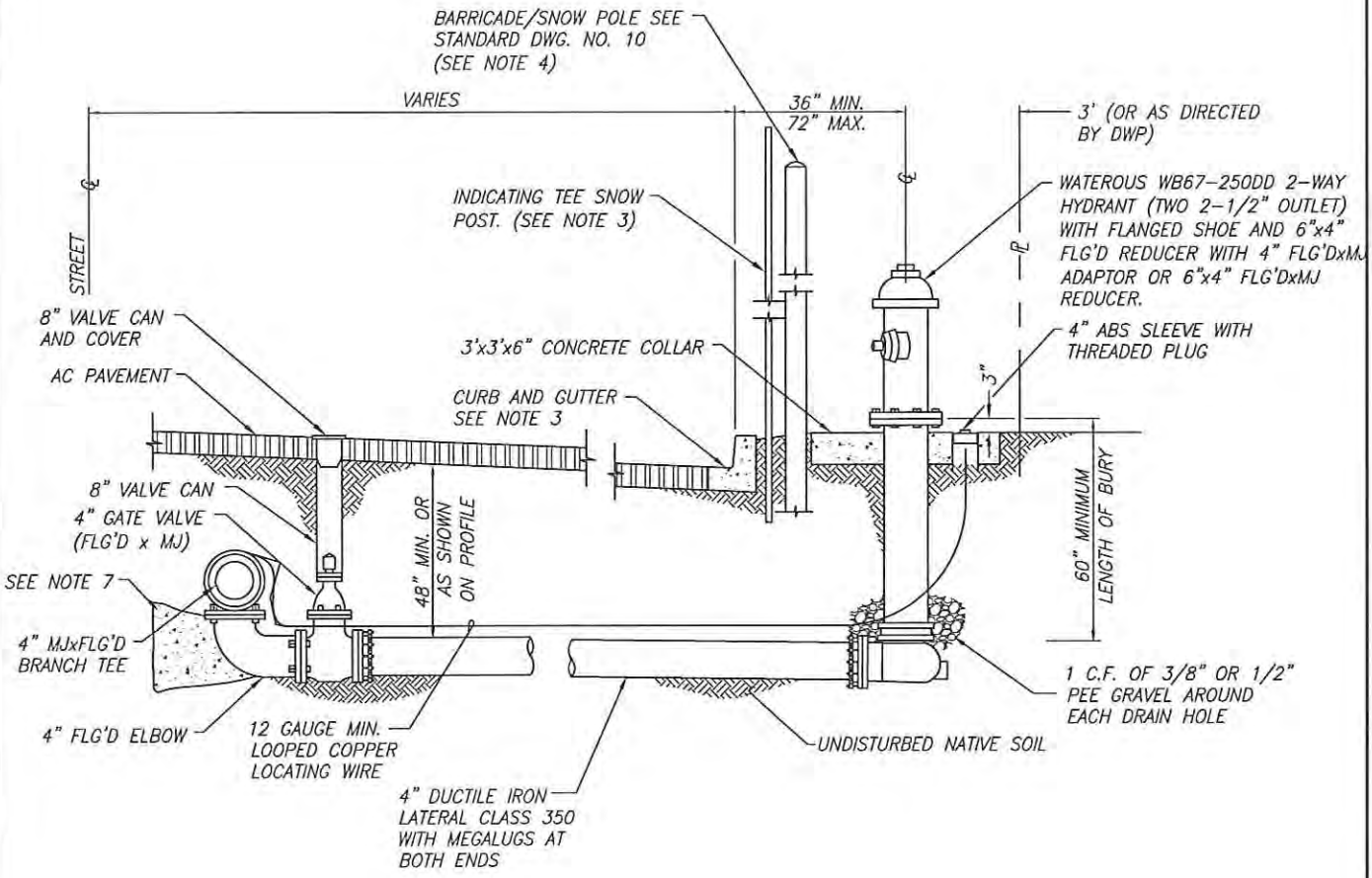

NOTES:

1. WRAP PLASTIC AROUND PARTS REQUIRING THRUST BLOCKS OR PIERS.
2. WEEP HOLE ON HYDRANT BARREL MUST BE CLEAR OF OBSTRUCTIONS.
3. ON ROADS WITH CURBS AND GUTTERS, INSTALL "INDICATING TEE" SNOW POST (6' ABOVE GRADE). LOCATE POST ON ONCOMING SIDE OF TRAFFIC.
4. ON ROADS WITHOUT CURBS, FIRE HYDRANTS SHALL BE LOCATED WITHIN THE RIGHT-OF-WAY, AT A MINIMUM THREE FEET FROM THE EDGE OF ASPHALT AND TWO FEET CLEAR FROM THE PROPERTY LINE, UNLESS OTHERWISE DIRECTED BY THE DWP INSPECTOR. UNDER LIMITED RIGHT-OF-WAY CONDITIONS INSTALL PER DWP INSPECTOR. PROVIDE BARRICADE POST AS SHOWN ON STANDARD DRAWING NO. 10.
5. THE HYDRANT SHALL BE PAINTED WATEROUS YELLOW VISTA PAINT CODE VP-06-10070.
6. SNOW POLE OR BARRICADE SHALL BE PAINTED IDENTICAL COLOR OF HYDRANT.
7. THRUST BLOCK REQUIRED ON EXISTING MAINS ONLY.

REV.	REVISION DESCRIPTION	BY	DATE

DEPARTMENT OF WATER AND POWER
CITY OF BIG BEAR LAKE

FLUSH-OUT DETAIL

APPROVED

GENERAL MANAGER — DATE 2-2-12

STANDARD DRAWING No. 7

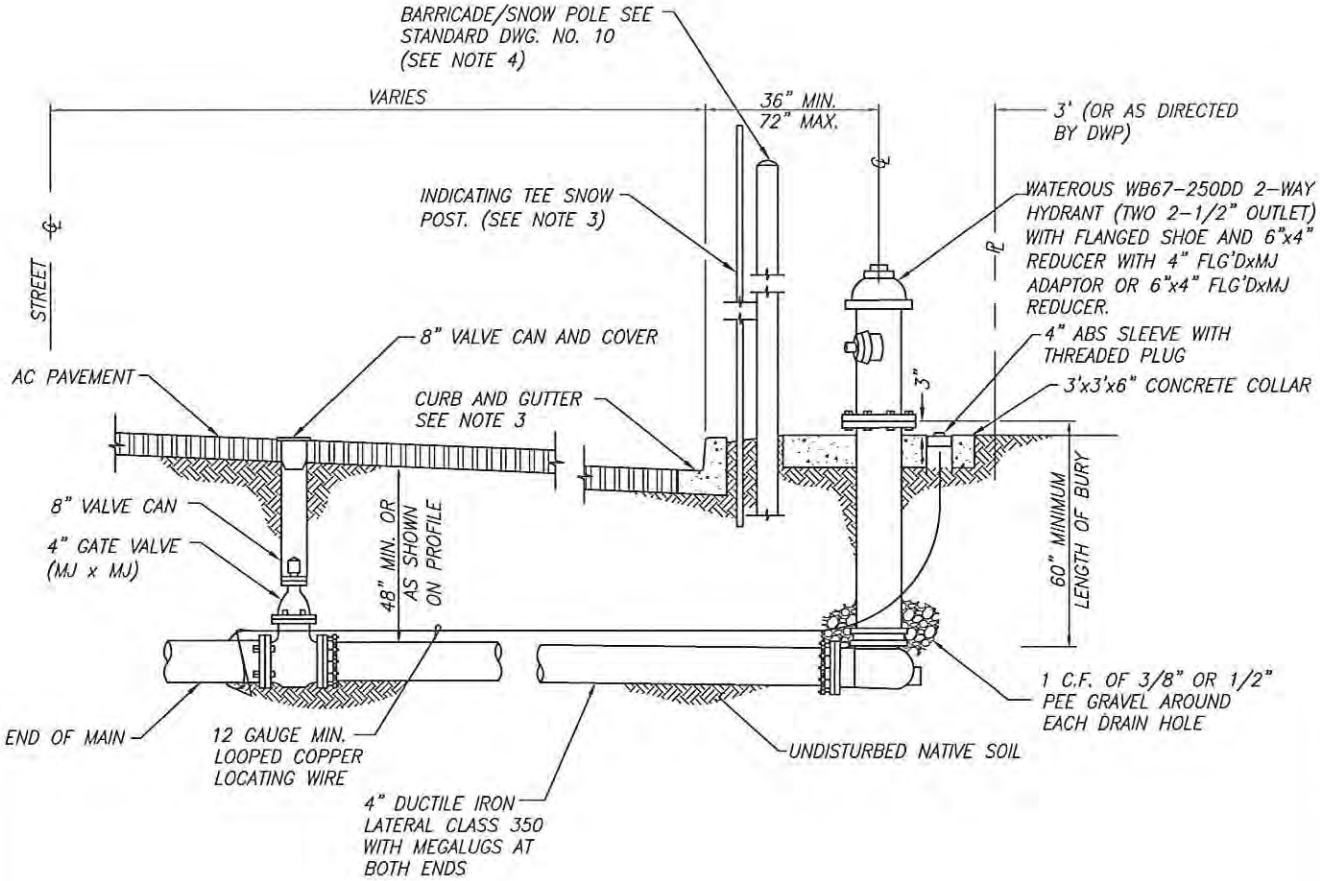

NOTES:

1. WRAP PLASTIC AROUND PARTS REQUIRING THRUST BLOCKS OR PIERS.
2. WEEP HOLE ON HYDRANT BARREL MUST BE CLEAR OF OBSTRUCTIONS.
3. ON ROADS WITH CURBS AND GUTTERS, INSTALL "INDICATING TEE" SNOW POST (6' ABOVE GRADE). LOCATE POST ON ONCOMING SIDE OF TRAFFIC.
4. ON ROADS WITHOUT CURBS, FIRE HYDRANTS SHALL BE LOCATED WITHIN THE RIGHT-OF-WAY, AT A MINIMUM THREE FEET FROM THE EDGE OF ASPHALT AND TWO FEET CLEAR FROM THE PROPERTY LINE, UNLESS OTHERWISE DIRECTED BY THE DWP INSPECTOR. UNDER LIIMITED RIGHT OF WAY CONDITIONS INSTALL PER DWP INSPECTOR. PROVIDE BARRICADE POSTS AS SHOWN ON STANDARD DRAWING NO. 10.
5. THE HYDRANT SHALL BE PAINTED WATEROUS YELLOW VISTA PAINT CODE VP-06-10070.
6. SNOW POLE OR BARRICADE SHALL BE PAINTED IDENTICAL COLOR OF HYDRANT.

REV.	REVISION DESCRIPTION	BY	DATE

DEPARTMENT OF WATER AND POWER
CITY OF BIG BEAR LAKE

BLOW-OUT DETAIL

APPROVED

GENERAL MANAGER — DATE 2-2-12

STANDARD DRAWING No. 8

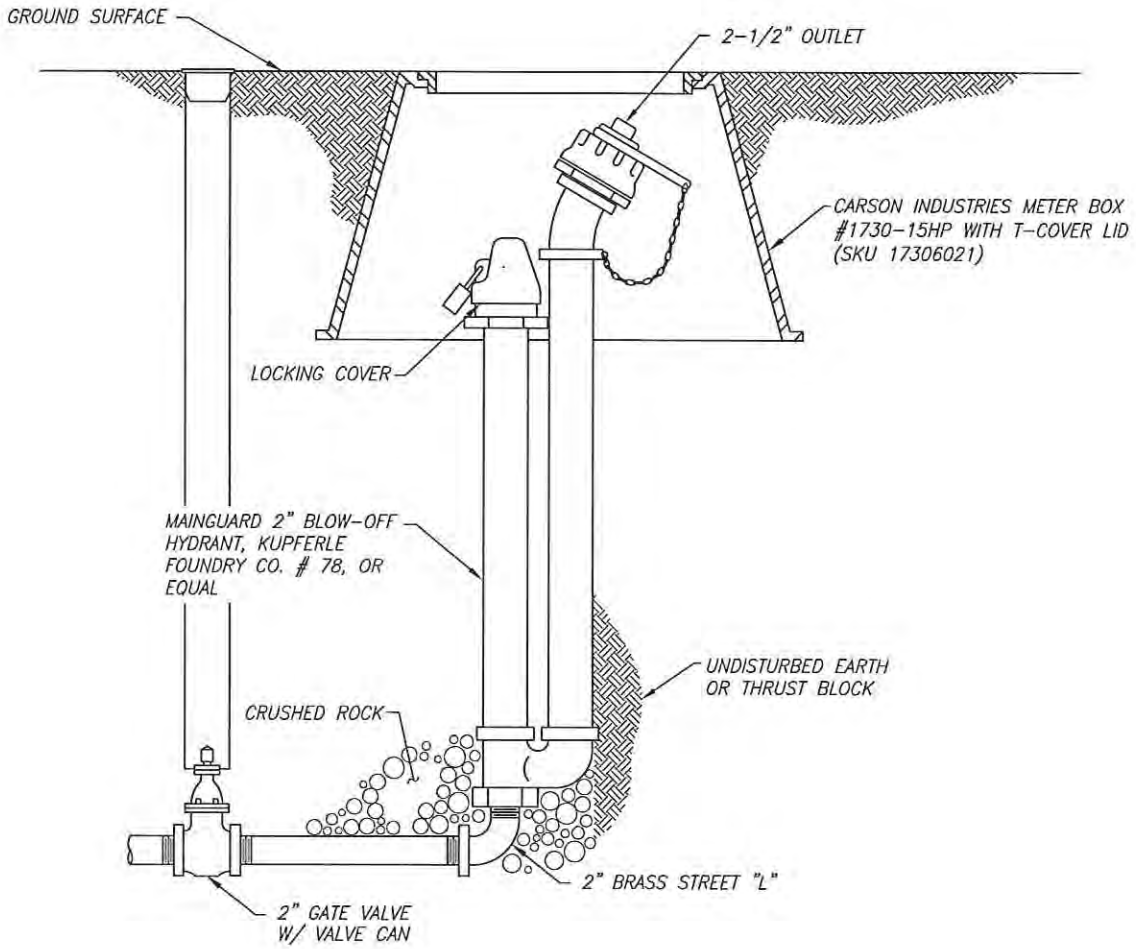

NOTES:

1. LOCATION TO BE FIELD DETERMINED BY DWP INSPECTOR.

REV.	REVISION DESCRIPTION	BY	DATE

DEPARTMENT OF WATER AND POWER
CITY OF BIG BEAR LAKE

2" BLOW OFF DETAIL

APPROVED

GENERAL MANAGER — DATE 2-2-12

STANDARD DRAWING No. 9

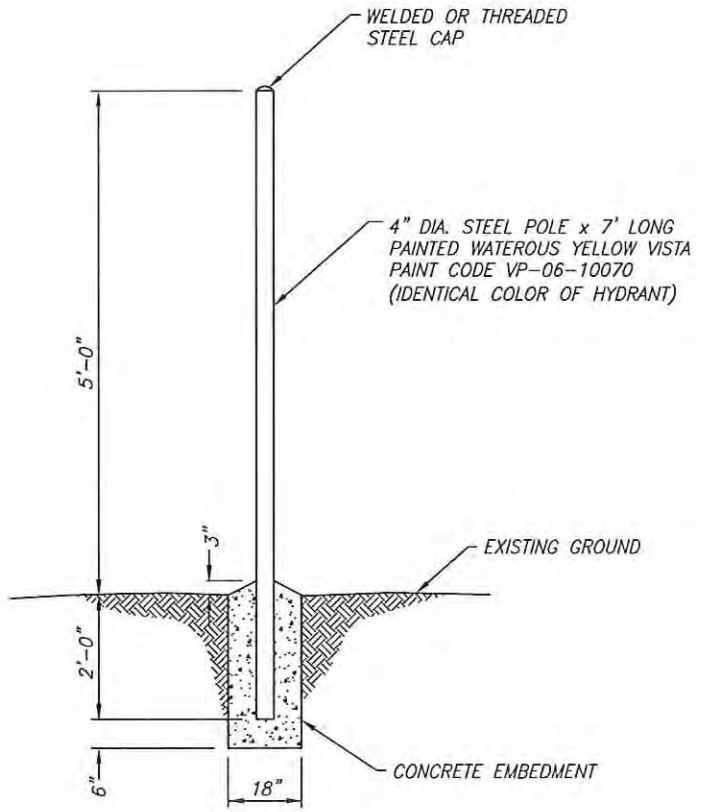

SECTION

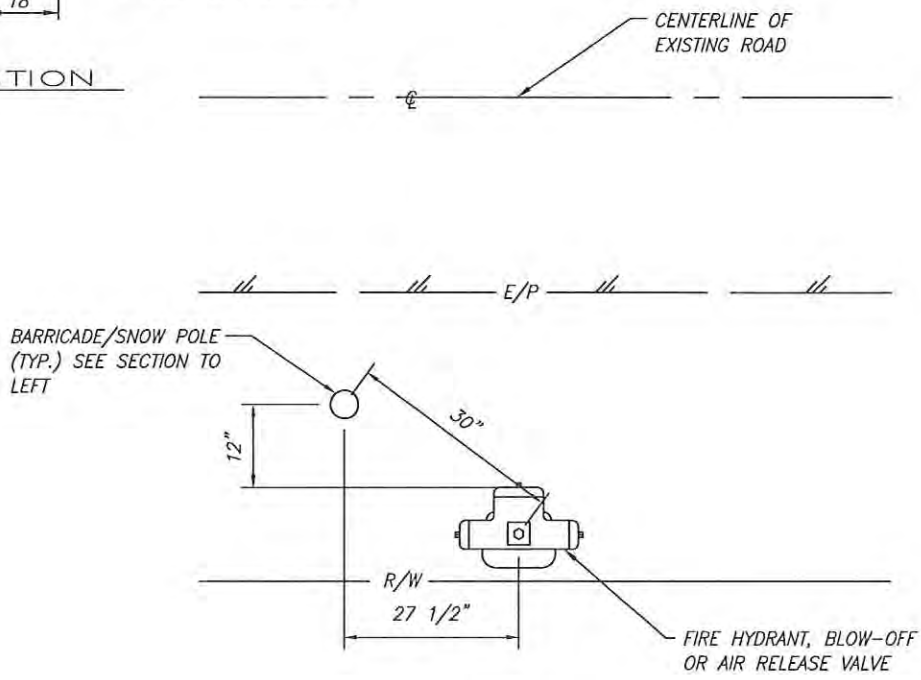

PLAN

REV.	REVISION DESCRIPTION	BY	DATE

DEPARTMENT OF WATER AND POWER
CITY OF BIG BEAR LAKE

BARRICADE / SNOW POLE DETAIL

APPROVED

GENERAL MANAGER — DATE 2-2-12

STANDARD DRAWING No. 10

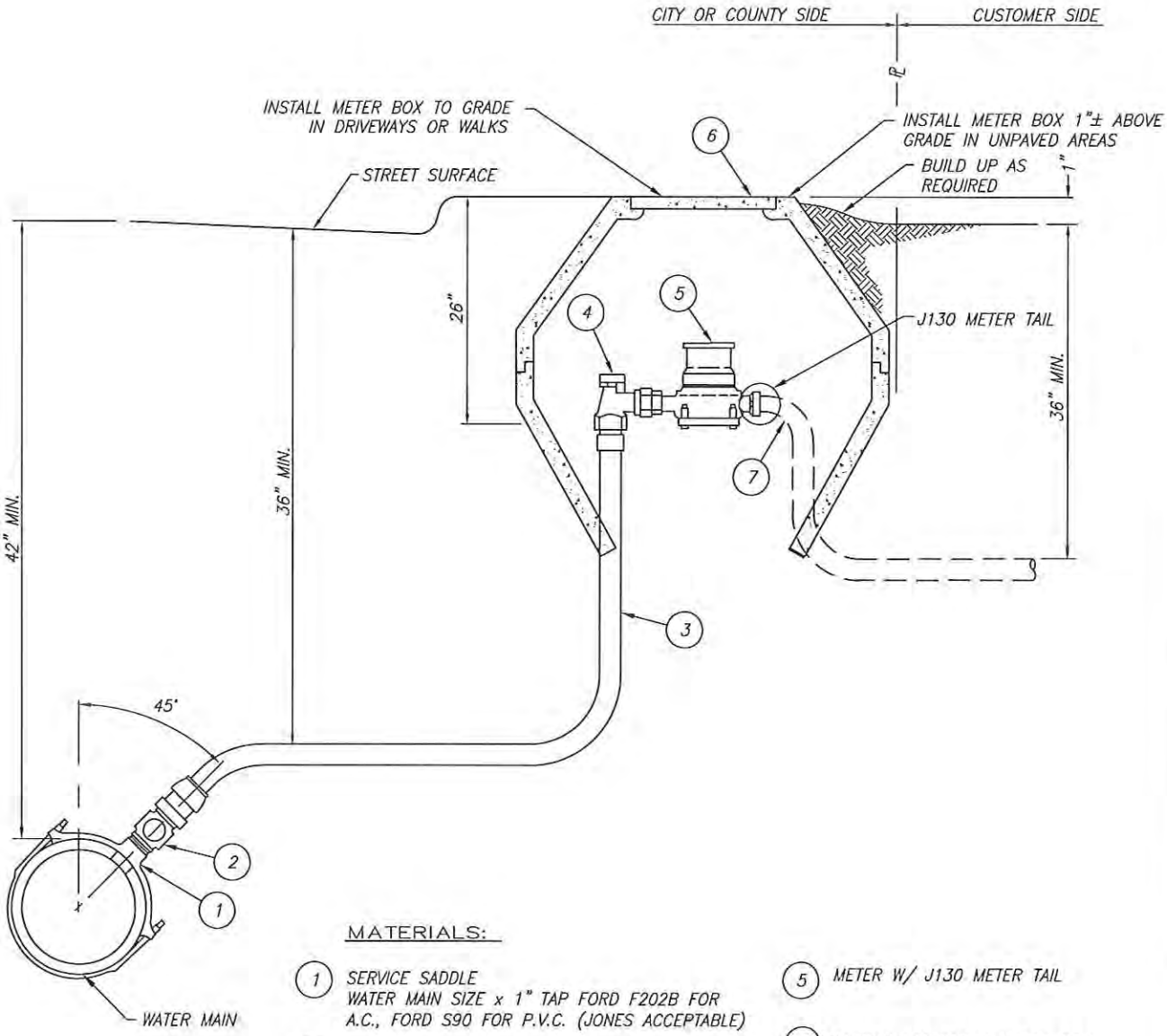

MATERIALS:

1. SERVICE SADDLE
   WATER MAIN SIZE x 1" TAP FORD F202B FOR A.C., FORD S90 FOR P.V.C. (JONES ACCEPTABLE)
2. 1" CORPORATION STOP x PACK JOINT FOR COPPER TUBING, FORD F-1000-4
3. 1" COPPER PIPE, TYPE K SOFT
4. 1" ANGLE INVERTED KEY METER VALVE x PACK JOINT FOR COPPER TUBING, FORD KV 43-444W
5. METER W/ J130 METER TAIL
6. CARSON INDUSTRIES METER BOX
   TOP HALF - 1324-15HP WITH T-COVER LID (SKU 13246007)
   BOTTOM HALF - 1324-15HP (SKU 13242002)
7. CUSTOMER PIPE
8. SERVICES SHALL BE INSTALLED A MINIMUM OF 5 FEET FROM ALL SEWER LATERALS

NOTES:

1. FOR SERVICE RECONNECTIONS, THE CONTRACTOR SHALL FURNISH AND INSTALL MATERIAL ITEM 1 THRU 4.

REV.	REVISION DESCRIPTION	BY	DATE

DEPARTMENT OF WATER AND POWER
CITY OF BIG BEAR LAKE

TYPICAL SERVICE CONNECTION FOR 1" METERS

APPROVED

GENERAL MANAGER — DATE 2-2-12

STANDARD DRAWING No. 11

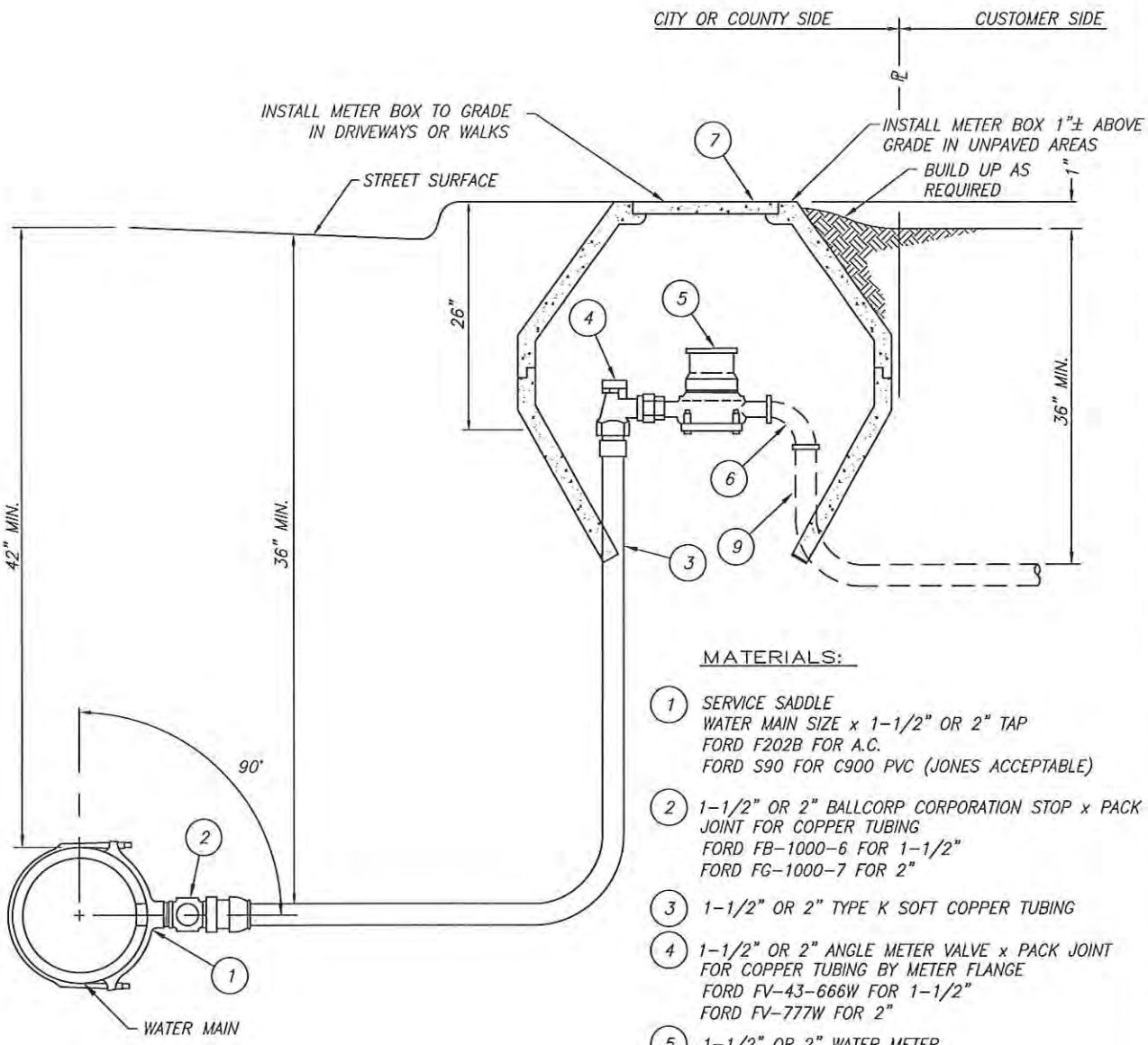

MATERIALS:

1. SERVICE SADDLE
   WATER MAIN SIZE x 1-1/2" OR 2" TAP
   FORD F202B FOR A.C.
   FORD S90 FOR C900 PVC (JONES ACCEPTABLE)
2. 1-1/2" OR 2" BALLCORP CORPORATION STOP x PACK JOINT FOR COPPER TUBING
   FORD FB-1000-6 FOR 1-1/2"
   FORD FG-1000-7 FOR 2"
3. 1-1/2" OR 2" TYPE K SOFT COPPER TUBING
4. 1-1/2" OR 2" ANGLE METER VALVE x PACK JOINT FOR COPPER TUBING BY METER FLANGE
   FORD FV-43-666W FOR 1-1/2"
   FORD FV-777W FOR 2"
5. 1-1/2" OR 2" WATER METER
6. 1-1/2" OR 2" FLANGED ELLS METER COUPLINGS x FEMALE IRON PIPE THREAD
   FORD LF31-66 FOR 1-1/2"
   FORD LF31-77 FOR 2"
7. CARSON INDUSTRIES METER BOX
   TOP HALF - 1730-15HP WITH T-COVER LID (SKU 17306021)
   BOTTOM HALF - 1730-15HP (SKU 17302002)
8. SERVICES SHALL BE INSTALLED A MINIMUM OF 5 FEET FROM ALL SEWER LATERALS.
9. CUSTOMER PIPE

NOTES:

1. FOR SERVICE RECONNECTIONS, THE CONTRACTOR SHALL FURNISH AND INSTALL MATERIAL ITEM 1 THRU 4.

REV.	REVISION DESCRIPTION	BY	DATE

DEPARTMENT OF WATER AND POWER
CITY OF BIG BEAR LAKE

1-1/2" AND 2" SERVICE

APPROVED

GENERAL MANAGER — DATE 2-2-12

STANDARD DRAWING No. 12

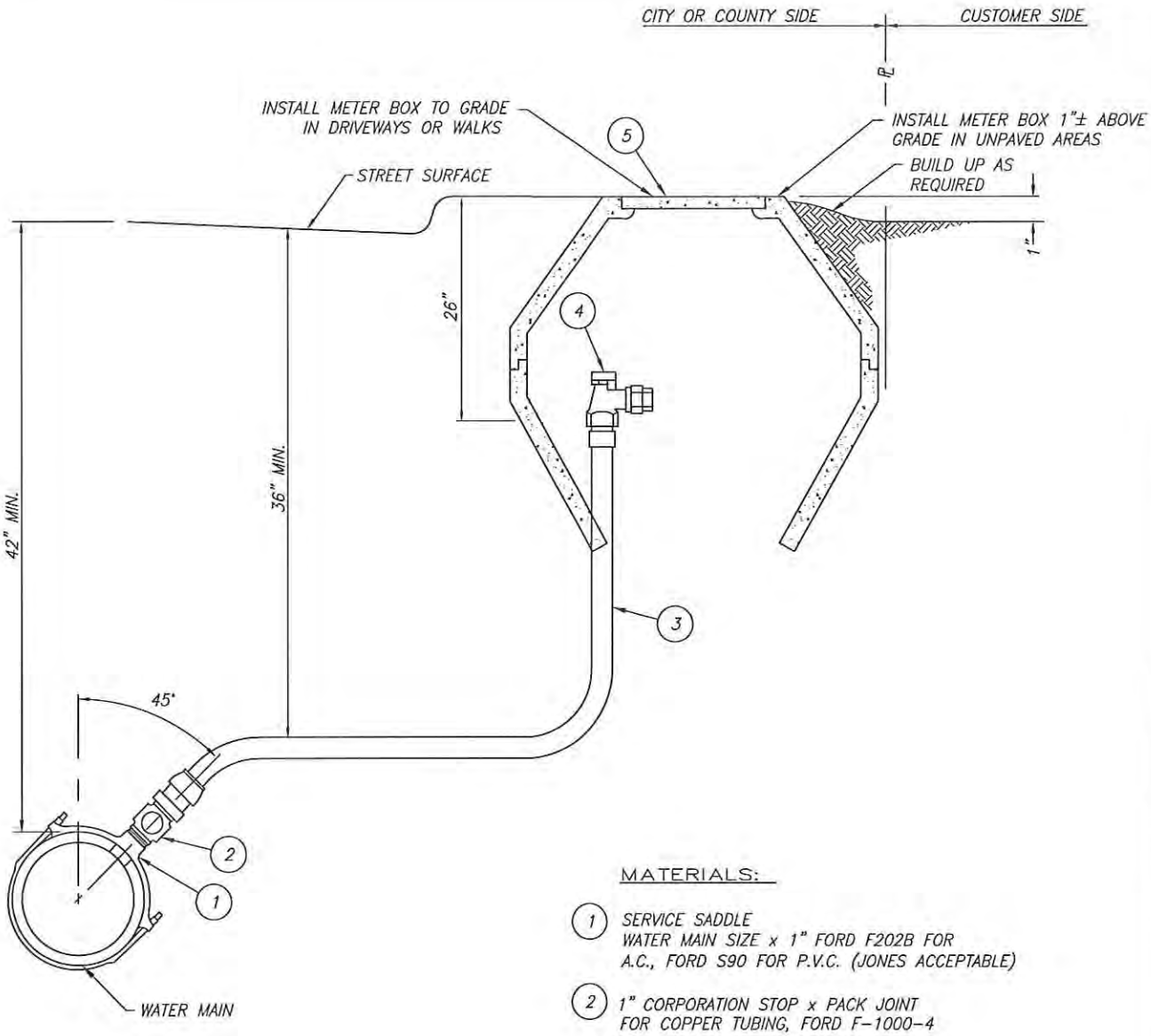

MATERIALS:

1. SERVICE SADDLE
   WATER MAIN SIZE x 1" FORD F202B FOR A.C., FORD S90 FOR P.V.C. (JONES ACCEPTABLE)
2. 1" CORPORATION STOP x PACK JOINT FOR COPPER TUBING, FORD F-1000-4
3. 1" COPPER PIPE, TYPE K SOFT
4. 1" ANGLE INVERTED KEY METER VALVE x PACK JOINT FOR COPPER TUBING, FORD KV 43-444W
5. CARSON INDUSTRIES METER BOX
   TOP HALF - 1324-15HP WITH T-COVER LID (SKU 13246007)
   BOTTOM HALF - 1324-15HP (SKU 13242002)
6. SERVICES SHALL BE INSTALLED A MINIMUM OF 5 FEET FROM ALL SEWER LATERALS.

REV.	REVISION DESCRIPTION	BY	DATE

DEPARTMENT OF WATER AND POWER
CITY OF BIG BEAR LAKE

TYPICAL SERVICE PRESET
FOR 1" METERS

APPROVED

GENERAL MANAGER — DATE 2.2.12

STANDARD DRAWING No. 13

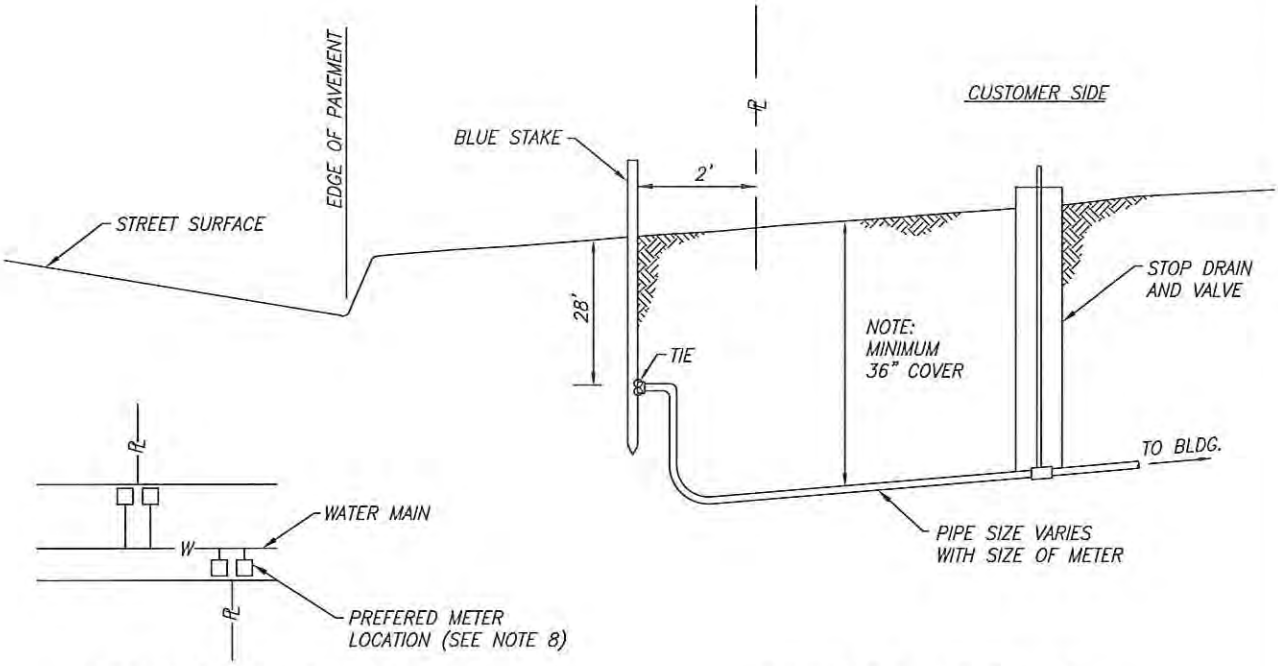

SERVICE PLAN

SERVICE PROFILE

INSTALLATION NOTES

THE DWP WILL CONNECT TO THE OWNER'S WATER LINES WHEN THE DWP INSTALLS THE SERVICE PROVIDING THE PROPERTY OWNER'S WATER LINES AND CONNECTIONS ARE ALREADY IN PLACE ACCORDING TO THE SPECIFICATIONS LISTED BELOW.

NOTES:

1. A DWP FIELD REPRESENTATIVE WILL MEET THE PROPERTY OWNER AT THE SERVICE ADDRESS TO INSPECT THE AREA WHERE THE METER WILL BE SET AND MARK THE AREA WITH A BLUE STAKE.
2. PROPERTY MUST HAVE SURVEY STAKES TO VERIFY THE PROPERTY LINES.
3. THE FINISHED GRADE AT THE METER LOCATION MUST BE AT A LEVEL NOT TO EXCEED 10% UP OR DOWN. ALL METERS ON SLOPES GREATER THAN 10% SHALL BE INSTALLED PER DRAWING NO. 15.
4. THE METER WILL BE INSTALLED PERPENDICULAR (AT A RIGHT ANGLE) TO THE EDGE OF THE STREET.
5. CUSTOMERS' CONNECTION POINT MUST BE 26 INCHES BELOW FINISHED GRADE, 4 FEET BACK OF THE EDGE OF PAVEMENT (OR BACK OF CURB/BERM), AND HAVE A PLUGGED FEMALE THREADED PIPE FITTING (HORIZONTAL TO THE GROUND AND LOOKING AT A PERPENDICULAR <AT A RIGHT ANGLE> TO THE STREET).
6. A WOODEN STAKE SHALL BE DRIVEN INTO THE GROUND, EXTENDED 2 FEET ABOVE GROUND, PAINTED BLUE, AND TIED TO THE CONNECTION POINT OF THE METER.
7. CUSTOMER MUST HAVE AN OPERABLE STOP AND DRAIN VALVE BETWEEN THE METER AND THE BUILDING BEING SERVED.
8. PREFERED METER BOX LOCATION IS AT PROPERTY CORNER, 1 FOOT OFF PROPERTY LINE

REV.	REVISION DESCRIPTION	BY	DATE

DEPARTMENT OF WATER AND POWER
CITY OF BIG BEAR LAKE

WATER SERVICE LOCATION DETAIL

APPROVED

GENERAL MANAGER — DATE 2-22-12

STANDARD DRAWING No. 14

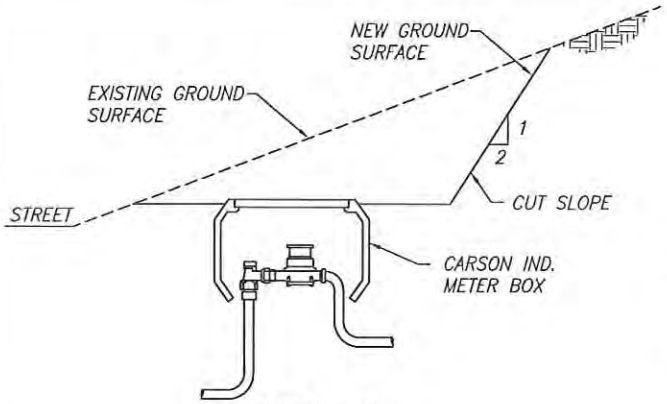

SECTION A
UPSLOPE

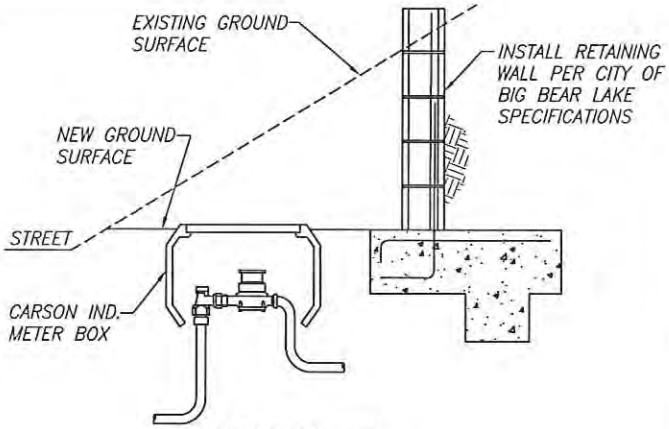

SECTION B
UPSLOPE

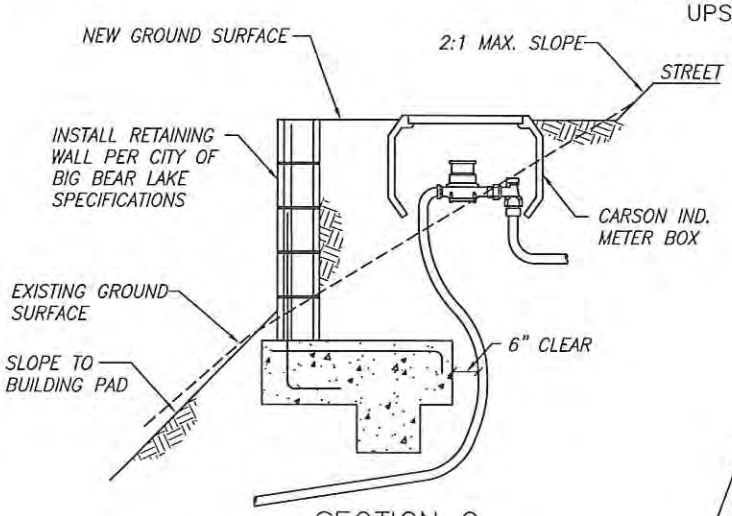

SECTION C
DOWNSLOPE

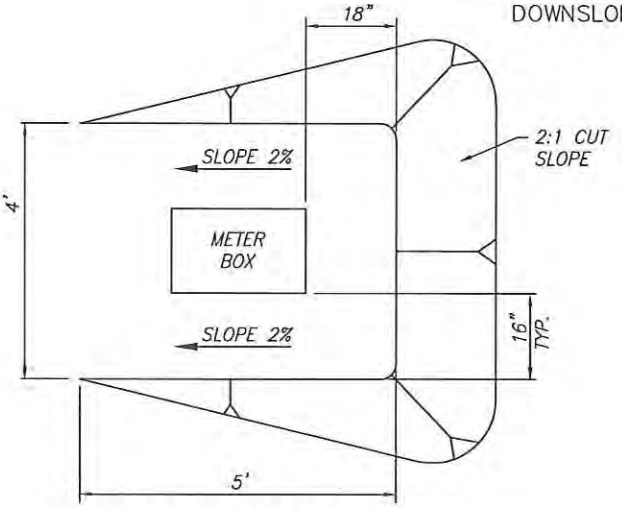

PLAN A (UPSLOPE)

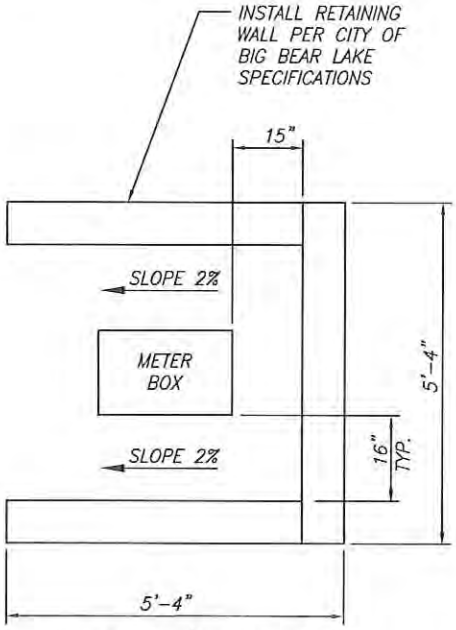

PLAN B (UPSLOPE)
(REVERSE FIGURE FOR DOWNSLOPE)

NOTES:

1. INSTALL METER PER THIS DETAIL ON ALL SLOPES GREATER THAN 10%
2. INSTALL METER BOX IN CENTER OF PAD

REV.	REVISION DESCRIPTION	BY	DATE

DEPARTMENT OF WATER AND POWER
CITY OF BIG BEAR LAKE

HILLSIDE WATER METER INSTALLATION DETAIL
UPSLOPE AND DOWNSLOPE

APPROVED

GENERAL MANAGER — DATE 2-2-12

STANDARD DRAWING No. 15

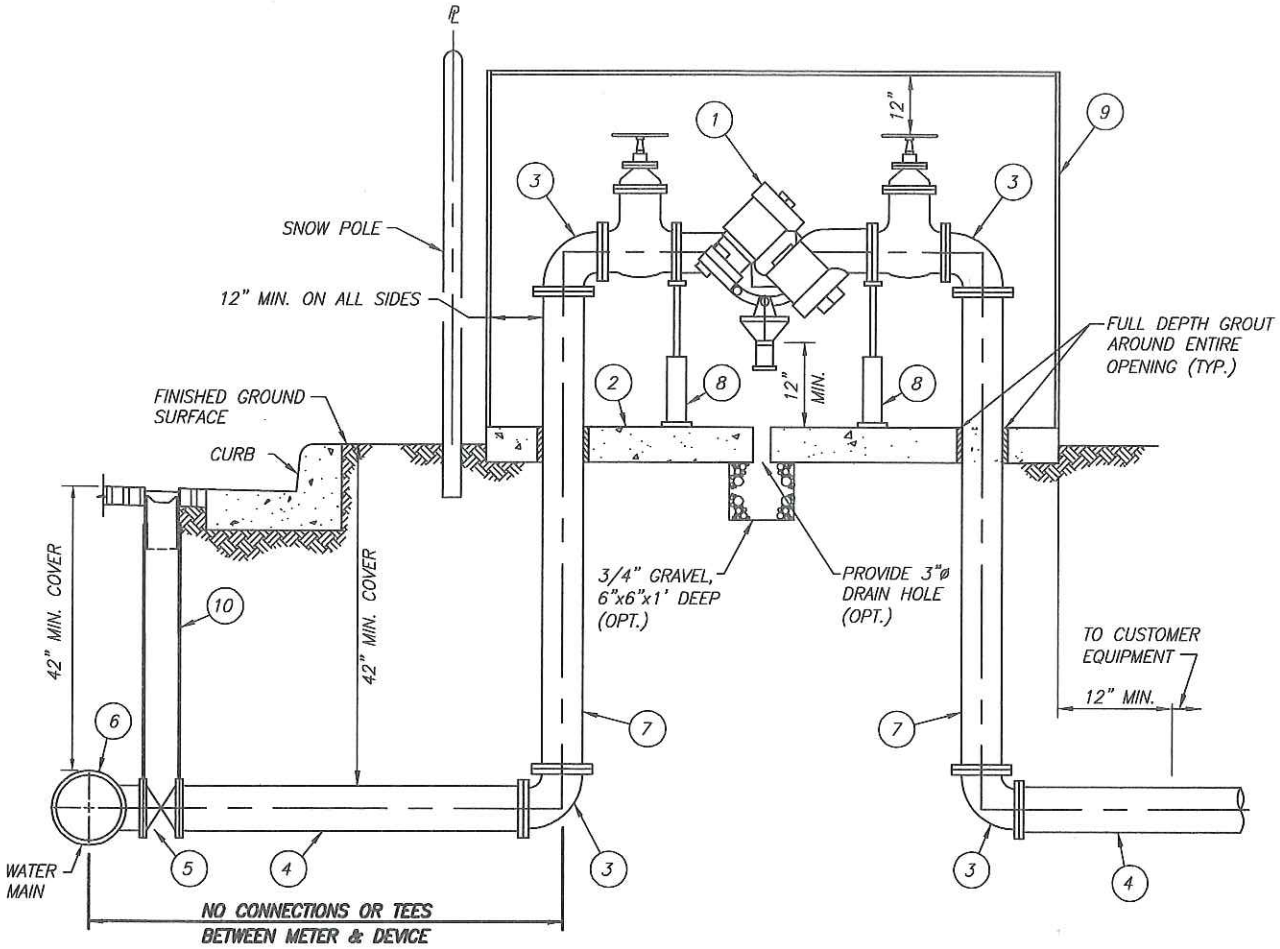

MATERIALS

1. 4"–10" REDUCED PRESSURE PRINCIPAL (RPP) BACKFLOW DEVICE OR REDUCED PRESSURE PRINCIPAL DETECTOR ASSEMBLY (RPPDA) WITH THE CURRENT DWP APPROVED 5/8" METER.
2. 6" THICK, 2500 PSI CONCRETE PAD
3. DUCTILE IRON 90° BEND
4. DUCTILE IRON OR C.M.L. PIPE
5. FLANGE x FLANGE OR FLANGE x MJ GATE VALVE
6. CUT IN TEE AS APPROVED BY DWP
7. DUCTILE IRON PIPE, CML, VARIABLE LENGTH
8. ADJUSTABLE PIPE SUPPORT WITH BASE PLATE (12"x12" MINIMUM – 1/4" THICK)
9. HEATED PROTECTIVE ENCLOSURE
10. VALVE BOX AND LID PER DWP STD. NO. 4

NOTES:

1. **CUSTOMER SHALL OWN, PURCHASE, INSTALL, AND MAINTAIN BACKFLOW DEVICE. THE DEVICE MUST BE INSPECTED AND TESTED IMMEDIATELY AFTER INSTALLATION AND ONCE A YEAR THEREAFTER. DWP SHALL VERIFY ANNUAL TESTING.**
2. **PIV/FDC DOES NOT BELONG TO DWP.** CHECK WITH LOCAL FIRE DEPARTMENT AND BUILDING & SAFETY FOR REQUIREMENTS.
3. THE "APPROVED" RPP BACKFLOW DEVICE AND RPPDA (AS APPROVED BY THE DWP AND CURRENT STATE HEALTH DEPARTMENT LIST) SHALL BE LOCATED AND INSTALLED SUBJECT TO THE APPROVAL OF THE DWP.
4. MINIMUM CLEARANCES PERTAIN TO ENCLOSURES THAT ARE PERMANENTLY INSTALLED AND HAVE SERVICE ACCESS DOORS. A VARIANCE OF THE MINIMUM CLEARANCES MAY BE GRANTED FOR ENCLOSURES THAT ARE REMOVABLE. ENCLOSURES MUST BE INSULATED TO A MINIMUM OF R–38.

REV.	REVISION DESCRIPTION	BY	DATE

DEPARTMENT OF WATER AND POWER
CITY OF BIG BEAR LAKE

4"–10" RPP & 4"–10" RPPDA

APPROVED
Reynold A. [signature] 1-20-15
GENERAL MANAGER DATE

STANDARD DRAWING No.
16RP

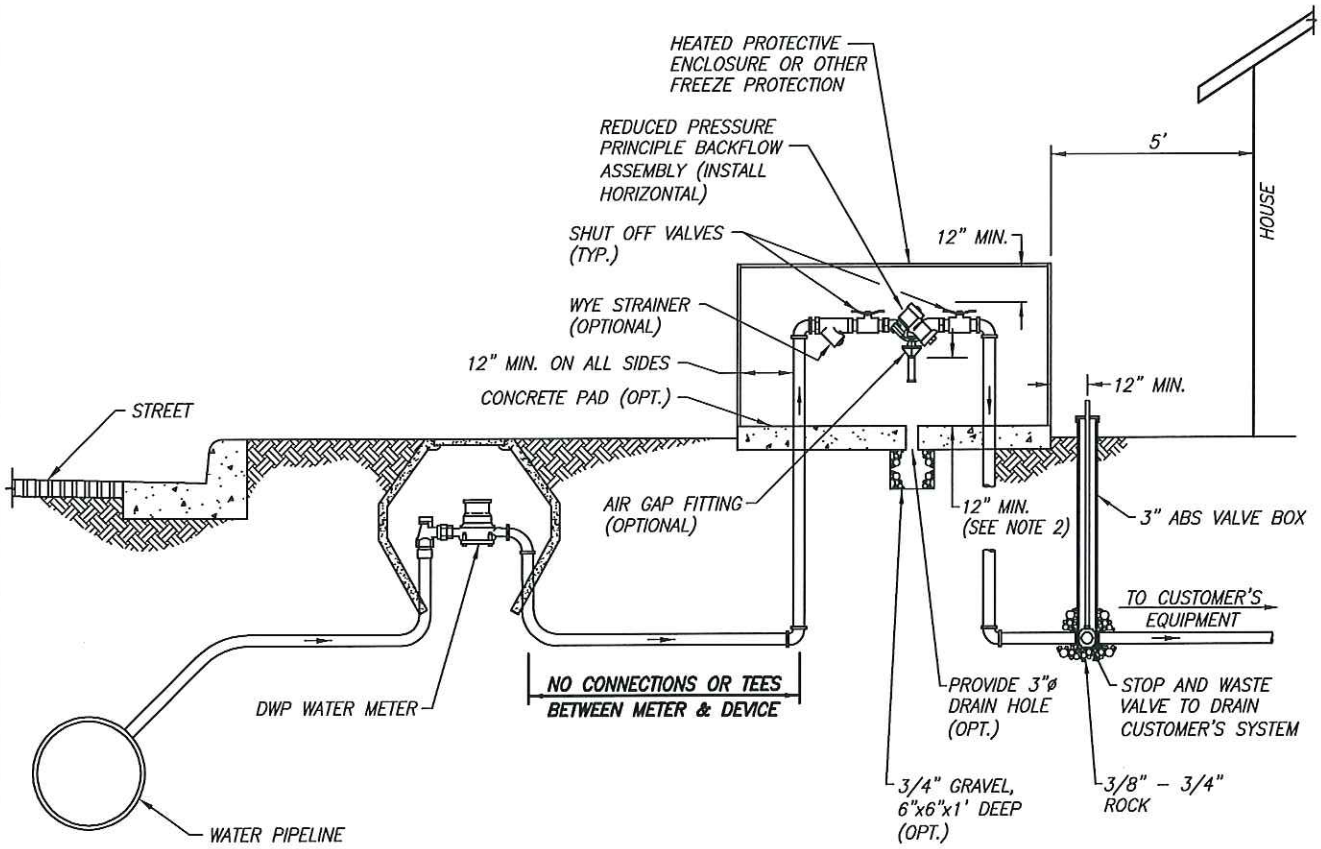

NOTES:

1. THE "APPROVED" REDUCED PRESSURE PRINCIPLE BACKFLOW ASSEMBLY (AS APPROVED BY THE DWP AND CURRENT STATE HEALTH DEPARTMENT LIST) SHALL BE LOCATED AND INSTALLED SUBJECT TO THE APPROVAL OF THE DWP.
2. A PRESSURE RELIEF VALVE SHALL BE INSTALLED PER UNIFORM PLUMBING CODE.
3. **THE DEVICE MUST BE INSPECTED AND TESTED IMMEDIATELY AFTER INSTALLATION AND ONCE A YEAR THEREAFTER.**
4. MINIMUM CLEARANCES PERTAIN TO ENCLOSURES THAT ARE PERMANENTLY INSTALLED; IN THIS CASE, SERVICE ACCESS DOOR MUST BE PROVIDED. A VARIANCE OF THE MINIMUM CLEARANCES MAY BE GRANTED FOR ENCLOSURES THAT ARE REMOVABLE. ENCLOSURES MUST BE INSULATED TO A MINIMUM OF R–38.
5. HEAT TAPE ALL ABOVE GROUND PIPING
6. DEVICE SHALL BE INSTALLED WITHIN 5' OF THE FRONT OF THE HOUSE OR IN A TESTABLE DWP APPROVED LOCATION.

REV.	REVISION DESCRIPTION	BY	DATE
2	STOP AND WASTE VALVE	WSC	1/2015
1	HEATED ENCLOSURE AND NOTE 6	WSC	3/2014

DEPARTMENT OF WATER AND POWER
CITY OF BIG BEAR LAKE

3/4" – 2" REDUCED PRESSURE PRINCIPLE BACKFLOW ASSEMBLY

APPROVED
GENERAL MANAGER — DATE 1-8-15

STANDARD DRAWING No. 17

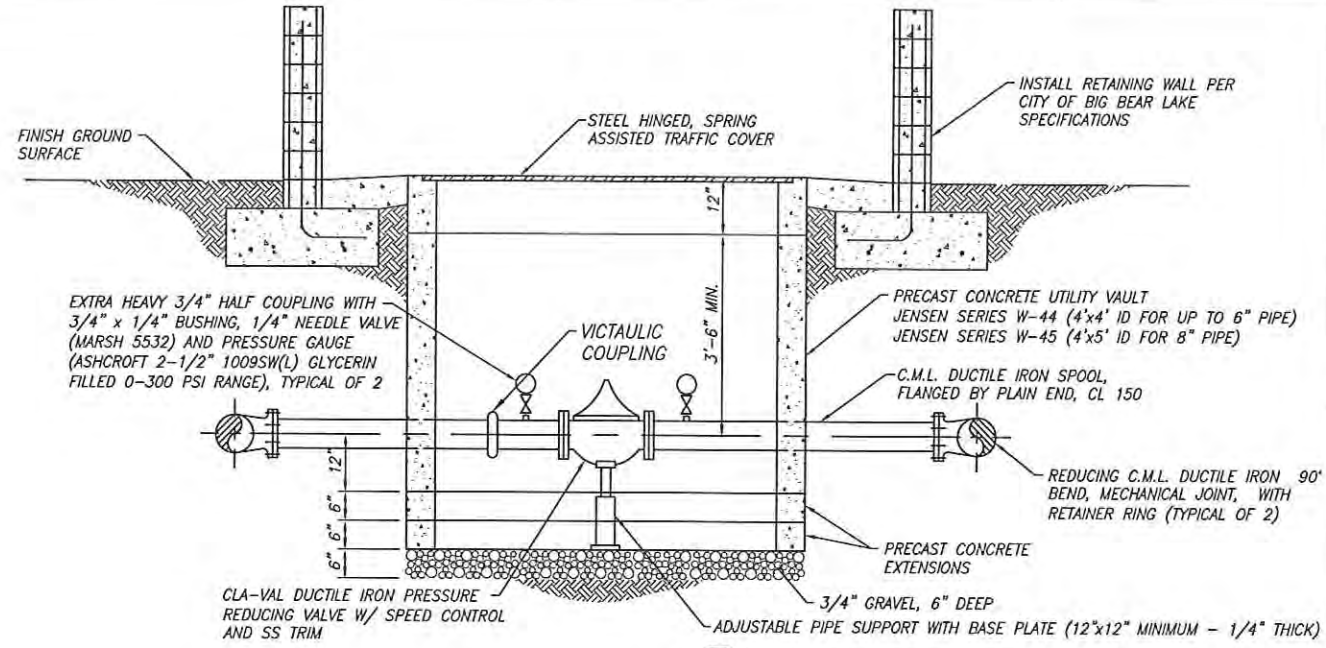

SECTION 1 / —
NOT TO SCALE

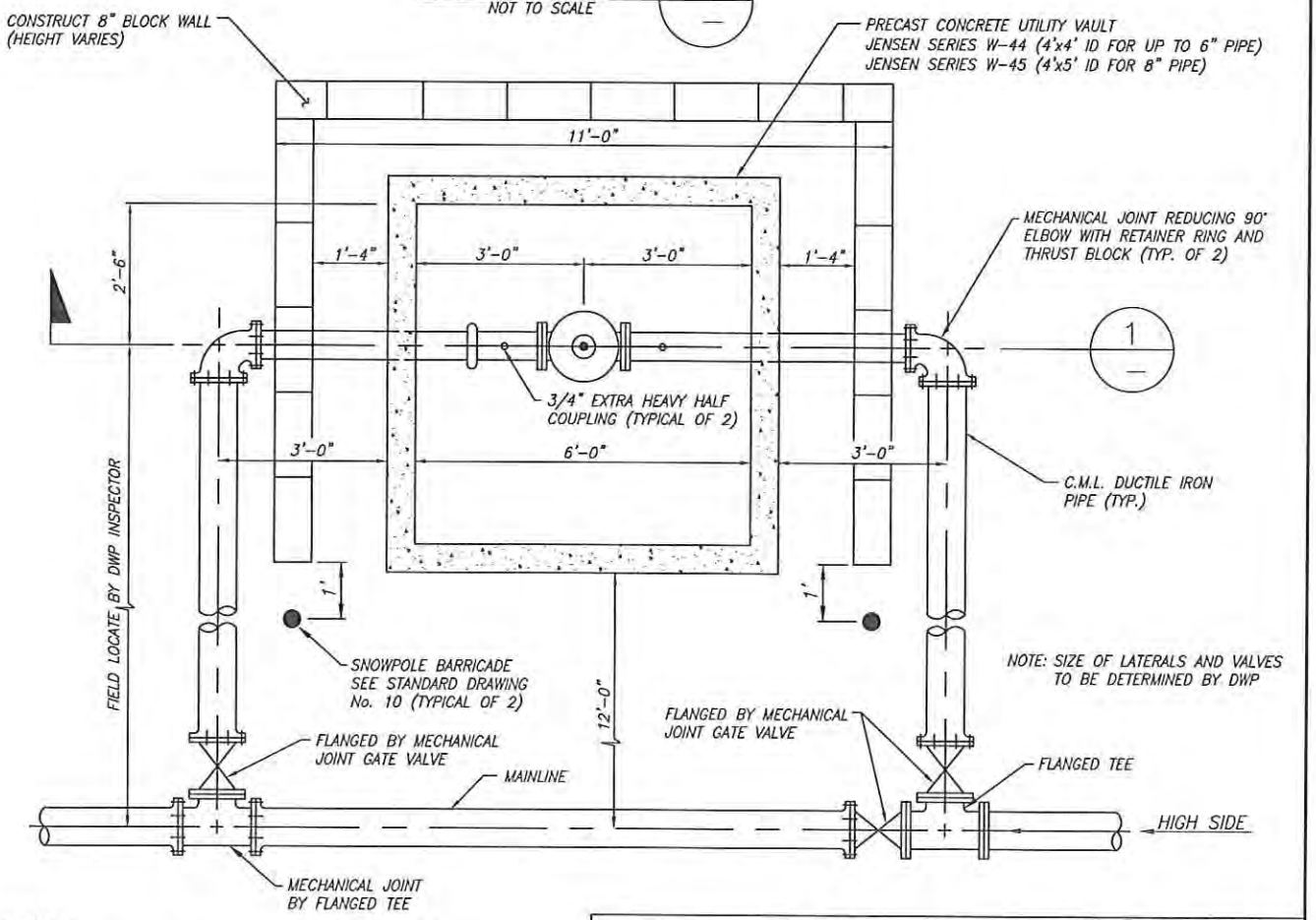

PLAN
NOT TO SCALE

NOTES:

1. ALL JOINTS SHALL BE RESTRAINED.

REV.	REVISION DESCRIPTION	BY	DATE

DEPARTMENT OF WATER AND POWER
CITY OF BIG BEAR LAKE

PRESSURE REDUCING STATION

APPROVED

GENERAL MANAGER — DATE 2-2-12

STANDARD DRAWING No. 18

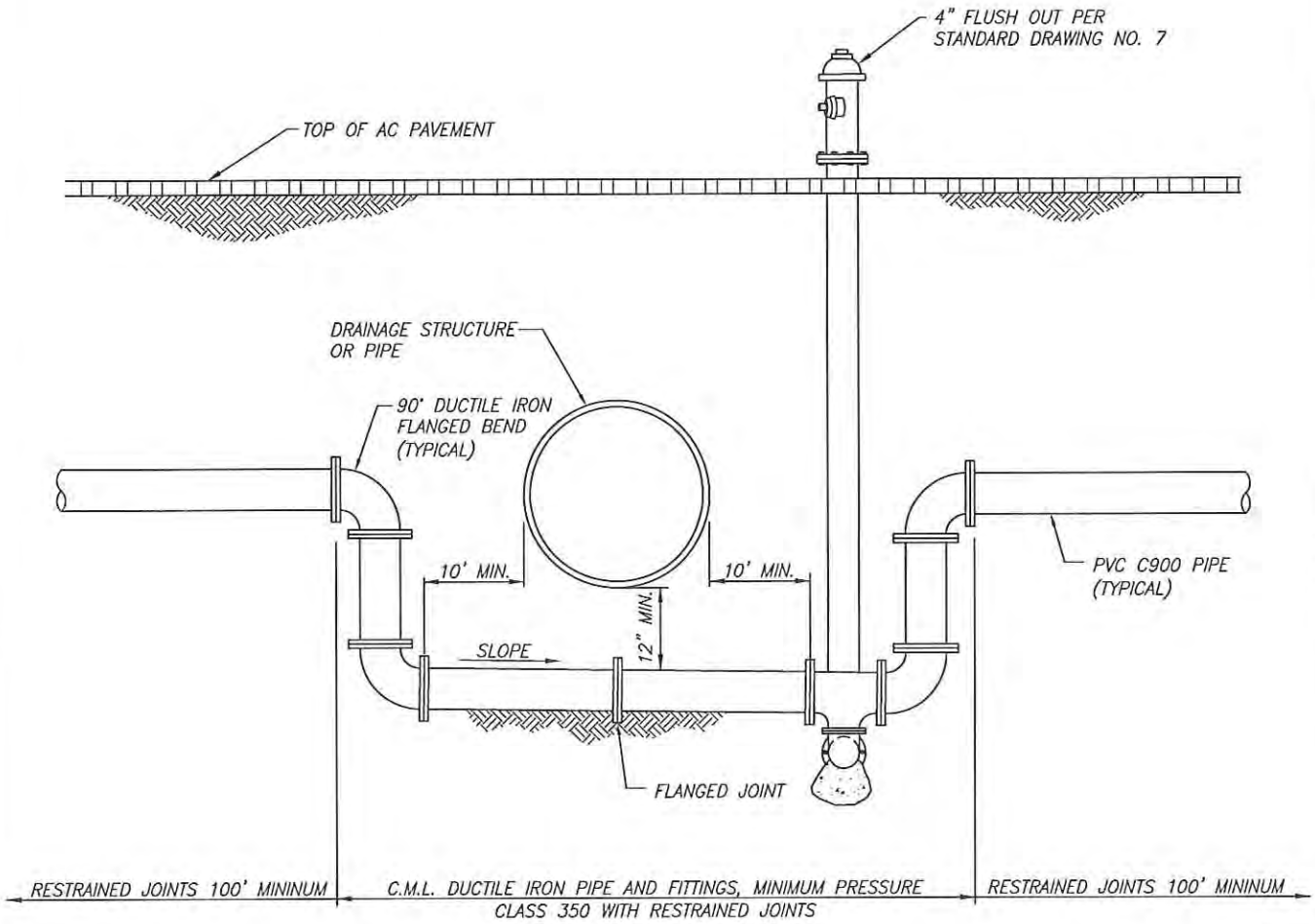

REV.	REVISION DESCRIPTION	BY	DATE

DEPARTMENT OF WATER AND POWER
CITY OF BIG BEAR LAKE

TYPICAL DROP SECTION

APPROVED

GENERAL MANAGER — DATE 2-2-12

STANDARD DRAWING No. 19

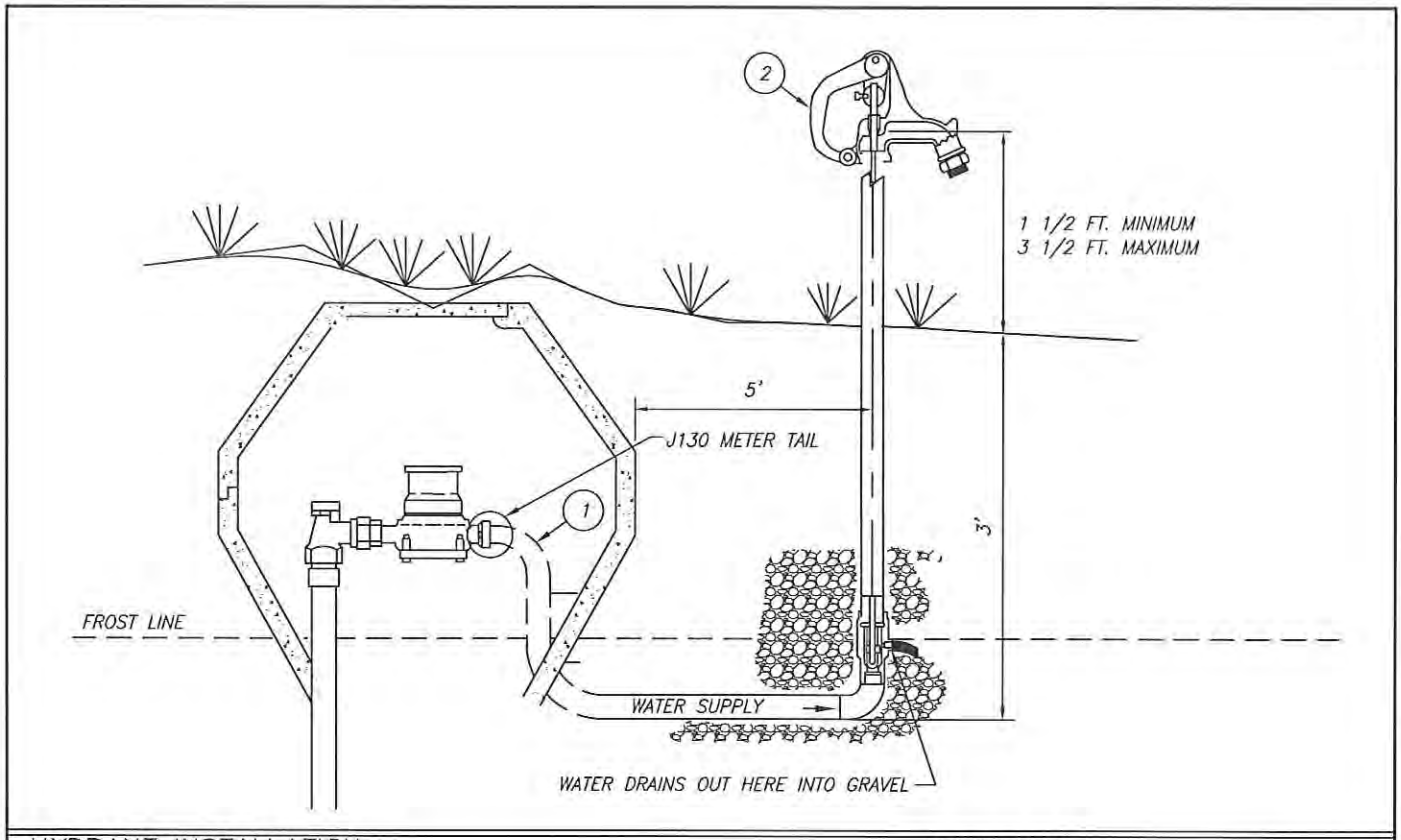

HYDRANT INSTALLATION

1. DIG HOLE FOR HYDRANT APPROXIMATELY 2 FEET IN DIAMETER AND 1 FOOT DEEPER THAN THE BURY DEPTH.
2. FLUSH PIPING BEFORE CONNECTING THE HYDRANT TO CLEAR ANY GRAVEL OR OTHER DEBRIS THAT MAY HAVE COLLECTED IN THE PIPING DURING ITS INSTALLATION AND ASSEMBLY. IF NOT FLUSHED OUT OF THE PIPING, THIS DEBRIS MAY JAM THE HYDRANT MECHANISM OR CLOG THE FLOW PORTS.
3. FILL THE HOLE AROUND AND BELOW THE HYDRANT WITH MEDIUM SIZE GRAVEL. THIS WILL PROVIDE A DRAIN FIELD FOR THE HYDRANT, WITHOUT A DRAIN FIELD, THE HYDRANT WILL NOT EMPTY ITSELF, AND IT WILL FREEZE IN COLD WEATHER. THIS WILL CAUSE DAMAGE TO THE HYDRANT AND RESULT IN LOSS OF WATER AND POSSIBLE FLOODING DAMAGE.

HYDRANT TIPS

* NEVER LEAVE HOSE ATTACHED TO HYDRANT AFTER USE, THIS WILL PREVENT THE HYDRANT FROM DRAINING PROPERLY AND WILL ALLOW THE HYDRANT TO FREEZE.

COMPLETELY TO CHECK FOR PROPER DRAINAGE BY:

* IF THE HYDRANT IS TO BE INSTALLED INSIDE A BARN OR OTHER STRUCTURE, OR IF IT IS INSTALLED IN ASPHALT OR CONCRETE SUCH AS A DRIVEWAY, CONNECT A 1/8" DRAIN PIPE OR TUBE TO THE DRAIN PORT AND DIG A REMOTE DRAIN FIELD OUTSIDE THE STRUCTURE FOR THE DRAIN PIPE TO EMPTY INTO. WITHOUT THIS REMOTE PIPING AND DRAIN FIELD, THE WATER FROM THE HYDRANT DRAINAGE WILL PERCOLATE UP TO THE SURFACE AROUND OR NEAR THE HYDRANT AND WILL DAMAGE THE FLOORING OR CAUSE MUDDY AREAS IN STALLS OR WALKWAYS.

WATER PRESSURE TO THE HYDRANT SHOULD BE REGULATED TO NOT MORE THAN 80 PSI. HIGHER PRESSURES WILL ACCELERATE WEAR AND MAY CAUSE LEAKAGE THAT WILL SATURATE THE GROUND AND DRAIN FIELD AND PREVENT

* THE HYDRANT FROM DRAINING. IF THE HYDRANT IS NOT ALLOWED TO DRAIN, IT CAN FREEZE AND CAUSE DAMAGE TO ITSELF AND CAUSE FLOODING AND LOSS OF WATER. HIGH PRESSURE WILL ALSO CAUSE YOU TO HAVE TO REPLACE PARTS AND ADJUST THE HYDRANT FREQUENTLY, A NORMAL OPERATING PRESSURE WOULD BE 20 TO 40 PSI

MATERIALS:

1. CUSTOMER PIPE
2. FROST FREE YARD HYDRANT–CLAYTON MARK# 5451 OR EQUIVALENT

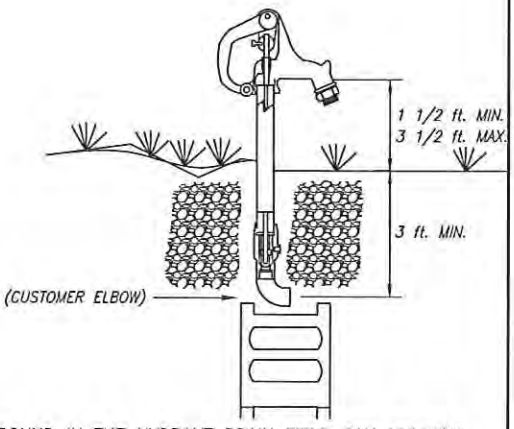

* SATURATED GROUND IN THE HYDRANT DRAIN FIELD CAN PREVENT THE HYDRANT FROM DRAINING AND MAY RESULT IN FREEZING. IF THE AREA WHERE YOUR HYDRANT IS LOCATED IS LOW LYING OR HAS A TENDENCY TO HAVE STANDING WATER, A LARGER DRAIN FIELD OR PIT MAY BE REQUIRED TO PROVIDE THE HYDRANT A PLACE TO DRAIN INTO.

REV.	REVISION DESCRIPTION	BY	DATE

DEPARTMENT OF WATER AND POWER
CITY OF BIG BEAR LAKE

FREEZE PROOF HYDRANT
FOR 1" METERS

APPROVED

GENERAL MANAGER — DATE 2-2-12

STANDARD DRAWING No. 20